CMT-CP333

SERVICE MANUAL

Ver 1.0 2003. 02

US Model
Canadian Model
AEP Model
UK Model
E Model

- CMT-CP333 is composed of following models.
  As for the service manual, it is issued for each component model, then, please refer to them.

COMPONENT MODEL NAME

	CMT-CP333
COMPACT DISK DECK RECEIVER SYSTEM	HCD-CP333
SPEAKER SYSTEM	SS-CCP333

SPECIFICATIONS

General

Power requirements	
North American model:	120 V AC, 60 Hz
European model:	230 V AC, 50/60 Hz
Other models:	110 - 120 V or 220 - 240 V AC , 50/60 Hz Adjustable with voltage selector
Power consumption	
European model	70 W 0.4 W (at the power saving mode)
Other models:	70 W
Dimensions (w/h/d)	Approx. 225 × 273 × 385 mm incl. projecting parts and controls
Mass	Approx. 7.3 kg
Supplied accessories	Remote commander (1) AM loop antenna (1) FM wire antenna (1) Batteries (2)

Design and specifications are subject to change without notice.

PARTS LIST

Part No.	Description	Remark
	ACCESSORIES **********	
1-476-705-12	COMMANDER, STANDARD (RM-SCP300)	
1-501-374-32	ANTENNA, LOOP (AM)	
1-501-659-62	ANTENNA (FM)(US,CND,E51)	
1-569-008-12	ADAPTOR, CONVERSION 2P (E51)	
1-754-060-13	ANTENNA (FM)(AEP,UK)	
4-233-757-16	MANUAL, INSTRUCTION (ENGLISH)	
4-233-757-24	MANUAL, INSTRUCTION (FRENCH, SPANISH) (AEP)	
4-233-757-34	MANUAL, INSTRUCTION (FRENCH)(US,CND)	
4-233-757-44	MANUAL, INSTRUCTION (SPANISH)(E51)	
4-233-757-54	MANUAL, INSTRUCTION (GERMAN, DUTCH, ITALIAN)(AEP)	
4-233-757-64	MANUAL, INSTRUCTION (SWEDISH, POLISH)(AEP)	
4-235-505-01	COVER, BATTERY (FOR RM-SCP300)	

- Abbreviation
  CND : Canadian model.
  E51 : Chilean and peruvian model.

MICRO HI-FI COMPONENT SYSTEM

9-877-050-01 **Sony Corporation**
2003B1600-1 **Home Audio Company**
© 2003.02
Published by Sony Engineering Corporation

SONY®

HCD-CP333

SERVICE MANUAL

Ver 1.1 2003. 11

US Model
Canadian Model
AEP Model
UK Model
E Model

- HCD-CP333 is the Amplifier, CD player, Tape Deck and Tuner section in CMT-CP333.

CD Section	Model Name Using Similar Mechanism	HCD-CP300
	CD Mechanism Type	CDM63K-K6BD44
	Optical Pick-up Type	KSM-213D
Tape deck Section	Model Name Using Similar Mechanism	HCD-CP300
	Tape Transport Mechanism Type	CMBL6Z511A

SPECIFICATIONS

Amplifier section

For the U.S. model

AUDIO POWER SPECIFICATIONS

POWER OUTPUT AND TOTAL HARMONIC DISTORTION:

With 6-ohm loads, both channels driven, from 120 - 10,000 Hz; rated 40 watts per channel minimum RMS power, with no more than 10% total harmonic distortion from 250 milliwatts to rated output.

North American model
Continuous RMS power output (reference): 40 + 40 W (6 ohms at 1 kHz, 10% THD)
Total harmonic distortion less than 0.07% (6 ohms at 1 kHz, 32 W)

European model
DIN power output (rated): 32 + 32 W (6 ohms at 1 kHz, DIN)
Continuous RMS power output (reference): 40 + 40 W (6 ohms at 1 kHz, 10% THD)
Music power output (reference): 100 + 100 W

Other models
The following measured at 230 V AC, 60 Hz
DIN power output (rated): 30 + 30 W (6 ohms at 1 kHz, DIN)
Continuous RMS power output (reference): 38 + 38 W (6 ohms at 1 kHz, 10% THD)

The following measured at 220 V AC, 60 Hz
DIN power output (rated): 27 + 27 W (6 ohms at 1 kHz, DIN)
Continuous RMS power output (reference): 35 + 35 W (6 ohms at 1 kHz, 10% THD)

Inputs
AUDIO IN MD (VIDEO) (phono jacks): Sensitivity 500/250 mV, impedance 47 kilohms

Outputs
CD DIGITAL OUT OPTICAL: Optical
PHONES: Accepts headphones with an impedance of 8 ohms or more
SPEAKER: 6 ohms

CD player section

System	Compact disc and digital audio system
Laser	Semiconductor laser (λ = 780 nm) Emission duration: continuous
Wavelength	780 - 790 nm
Frequency response	20 Hz - 20 kHz (±0.5 dB)

Tape player section

Recording system	4-track 2-channel stereo
Frequency response	50 - 13,000 Hz (±3 dB), using a Sony TYPE I cassette

Tuner section

FM stereo, FM/AM superheterodyne tuner

FM tuner section

Tuning range	
North American model:	87.5 - 108.0 MHz (100-kHz step)
Other models:	87.5 - 108.0 MHz (50-kHz step)
Antenna	FM wire antenna
Antenna terminals	75 ohm unbalanced
Intermediate frequency	10.7 MHz

— Continued on next page —

MICRO HI-FI COMPONENT SYSTEM

9-877-051-02
2003K16-1
© 2003.11

Sony Corporation
Home Audio Company
Published by Sony Engineering Corporation

SONY®

AM tuner section

Tuning range	
North American model:	530 - 1,710 kHz (with the tuning interval set at 10 kHz) 531 - 1,710 kHz (with the tuning interval set at 9 kHz)
European model:	531 - 1,602 kHz (with the tuning interval set at 9 kHz)
Other models:	530 - 1,710 kHz (with the tuning interval set at 10 kHz) 531 - 1,602 kHz (with the tuning interval set at 9 kHz)
Antenna	AM loop antenna, external antenna terminal
Intermediate frequency	450 kHz

General

Power requirements	
North American model:	120 V AC, 60 Hz
European model:	230 V AC, 50/60 Hz
Other models:	110 - 120 V or 220 - 240 V AC , 50/60 Hz Adjustable with voltage selector
Power consumption	
European model	70 W 0.4 W (at the power saving mode)
Other models:	70 W
Dimensions (w/h/d)	Approx. 225 × 273 × 385 mm incl. projecting parts and controls
Mass	Approx. 7.3 kg

•Design and specifications are subject to change without notice.

TABLE OF CONTENTS

1. SERVICING NOTES 4

2. GENERAL 5

3. DISASSEMBLY 7
- 3-1. Cover (Upper) 8
- 3-2. Front Panel Section 8
- 3-3. Tape Mechanism Deck-1 9
- 3-4. Tape Mechanism Deck-2 9
- 3-5. LED Board, CONTROL Board 10
- 3-6. Back Panel Sub Assy, JACK Board 10
- 3-7. MAIN Board 11
- 3-8. POWER Board 11
- 3-9. CD Mechanism Deck (CDM63K-K6BD44) 12
- 3-10. CD Board 12
- 3-11. Base Unit (BU-K6BD44) 13
- 3-12. Tray Assy 13
- 3-13. Silder (Loading) 14
- 3-14. TRAY SENSOR Board, MOTOR Board 14
- 3-15. IN OUT SW Board 15
- 3-16. Stocker Assy 15
- 3-17. CD Base Unit Assy, DISC SENSOR Board 16

4. TEST MODE 17

5. ELECTRICAL ADJUSTMENTS 18

6. DIAGRAMS 20
- 6-1. Note For Printed Wiring Boards And Schematic Diagrams 20
- 6-2. Block Diagrams 21
- 6-3. Circuit Boards Location 23
- 6-4. Printed Wiring Board – CD Board – 24
- 6-5. Schematic Diagram - CD Board - 25
- 6-6. Printed Wiring Board – TC Board – 26
- 6-7. Schematic Diagram – TC Board – 27
- 6-8. Printed Wiring Board – MAIN Board – 28
- 6-9. Schematic Diagram – MAIN Board (1/3) – 29
- 6-10. Schematic Diagram – MAIN Board (2/3) – 30
- 6-11. Schematic Diagram – MAIN Board (3/3) – 31
- 6-12. Printed Wiring Board – CONTROL Section – 32
- 6-13. Schematic Diagram – CONTROL Section – 33
- 6-14. Printed Wiring Board – DRIVER Section – 34
- 6-15. Schematic Diagram – DRIVER Section – 35
- 6-16. Printed Wiring Board – POWER Board – 36
- 6-17. Schematic Diagram – POWER Board – 37
- 6-18. Printed Wiring Board – LCD Section – 38
- 6-19. Schematic Diagram – LCD Section – 38
- 6-20. IC Pin Function Description 39
- 6-21. IC Block Diagrams 41

7. EXPLODED VIEWS 44
- 7-1. Cover Section 44
- 7-2. Front Panel Section 45
- 7-3. Chassis Section 46
- 7-4. CD Mechanism Deck-1 47
- 7-5. CD Mechanism Deck-2 48
- 7-6. KSM-213D 49

8. ELECTRICAL PARTS LIST 50

Notes on chip component replacement

- Never reuse a disconnected chip component.
- Notice that the minus side of a tantalum capacitor may be damaged by heat.

Flexible Circuit Board Repairing

- Keep the temperature of the soldering iron around 270 ˚C during repairing.
- Do not touch the soldering iron on the same conductor of the circuit board (within 3 times).
- Be careful not to apply force on the conductor when soldering or unsoldering.

CAUTION
Use of controls or adjustments or performance of procedures other than those specified herein may result in hazardous radiation exposure.

This appliance is classified as a CLASS 1 LASER product. The CLASS 1 LASER PRODUCT MARKING is located on the rear exterior.

CLASS 1 LASER PRODUCT
LUOKAN 1 LASERLAITE
KLASS 1 LASERAPPARAT

Laser component in this product is capable of emitting radiation exceeding the limit for Class 1.

SAFETY CHECK-OUT

After correcting the original service problem, perform the following safety check before releasing the set to the customer:
Check the antenna terminals, metal trim, “metallized” knobs, screws, and all other exposed metal parts for AC leakage.
Check leakage as described below.

LEAKAGE TEST

The AC leakage from any exposed metal part to earth ground and from all exposed metal parts to any exposed metal part having a return to chassis, must not exceed 0.5 mA (500 microamperes.). Leakage current can be measured by any one of three methods.

1. A commercial leakage tester, such as the Simpson 229 or RCA WT-540A. Follow the manufacturers’ instructions to use these instruments.

2. A battery-operated AC milliammeter. The Data Precision 245 digital multimeter is suitable for this job.

3. Measuring the voltage drop across a resistor by means of a VOM or battery-operated AC voltmeter. The “limit” indication is 0.75 V, so analog meters must have an accurate low-voltage scale. The Simpson 250 and Sanwa SH-63Trd are examples of a passive VOM that is suitable. Nearly all battery operated digital multimeters that have a 2 V AC range are suitable. (See Fig. A)

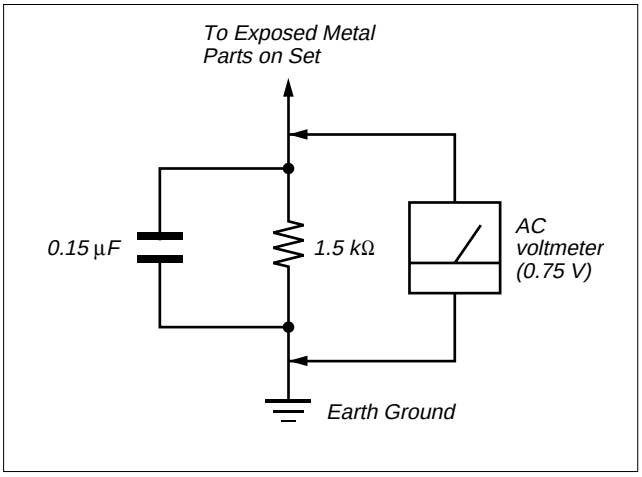

Fig. A. Using an AC voltmeter to check AC leakage.

SAFETY-RELATED COMPONENT WARNING!!

COMPONENTS IDENTIFIED BY MARK ⚠ OR DOTTED LINE WITH MARK ⚠ ON THE SCHEMATIC DIAGRAMS AND IN THE PARTS LIST ARE CRITICAL TO SAFE OPERATION. REPLACE THESE COMPONENTS WITH SONY PARTS WHOSE PART NUMBERS APPEAR AS SHOWN IN THIS MANUAL OR IN SUPPLEMENTS PUBLISHED BY SONY.

ATTENTION AU COMPOSANT AYANT RAPPORT À LA SÉCURITÉ!

LES COMPOSANTS IDENTIFÉS PAR UNE MARQUE ⚠ SUR LES DIAGRAMMES SCHÉMATIQUES ET LA LISTE DES PIÈCES SONT CRITIQUES POUR LA SÉCURITÉ DE FONCTIONNEMENT. NE REMPLACER CES COMPOSANTS QUE PAR DES PIÈSES SONY DONT LES NUMÉROS SONT DONNÉS DANS CE MANUEL OU DANS LES SUPPÉMENTS PUBLIÉS PAR SONY.

SECTION 1
SERVICING NOTES

NOTES ON HANDLING THE OPTICAL PICK-UP BLOCK OR BASE UNIT

The laser diode in the optical pick-up block may suffer electrostatic break-down because of the potential difference generated by the charged electrostatic load, etc. on clothing and the human body.
During repair, pay attention to electrostatic break-down and also use the procedure in the printed matter which is included in the repair parts.
The flexible board is easily damaged and should be handled with care.

NOTES ON LASER DIODE EMISSION CHECK

The laser beam on this model is concentrated so as to be focused on the disc reflective surface by the objective lens in the optical pick-up block. Therefore, when checking the laser diode emission, observe from more than 30 cm away from the objective lens.

MODEL IDENTIFICATION
— BACK PANEL —

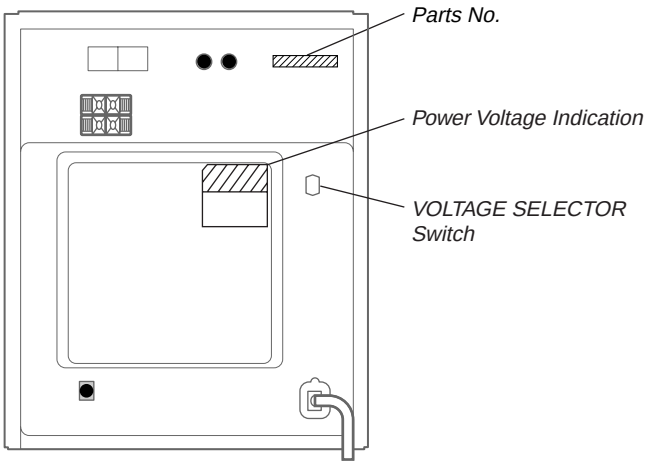

SERVICE POSTION

In checking the CD block, prepare jig (extension cable J-2501-011-B).

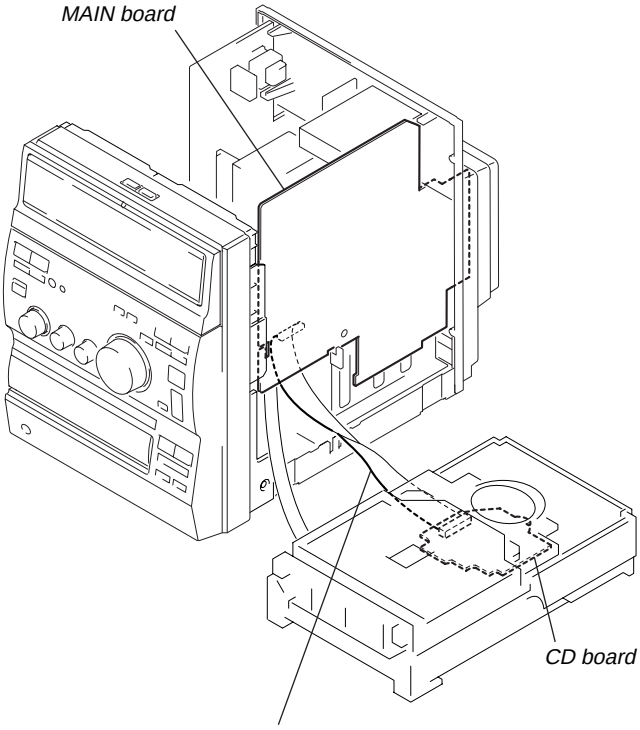

MODEL	PARTS No.	POWER VOLTAGE INDICATION
AEP model	4-233-470-3☐	AC:230V 50/60Hz 70W
UK model	4-233-470-3☐	
US model	4-233-470-4☐	AC:120V 60Hz 70W
Canadian model	4-233-470-4☐	
E model	4-233-470-5☐	AC:110-120/220-240V 50/60Hz 70W

SECTION 2
GENERAL

This section is extracted from instruction manual.

Main unit

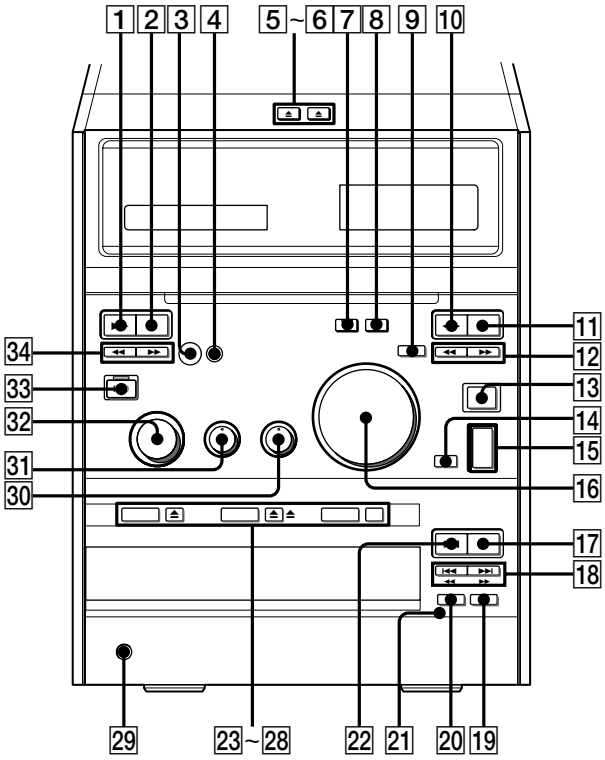

1 DISC indicator 21
BASS 31
CD 1 23
CD 1 ⏏ 24
CD 2 25
CD 2 ⏏ 26
CD 3 27
CD 3 ⏏ 28
CD SYNC 7
CD ▶II 22
CD ■ 17
CD I◀◀ /▶▶I 18
CD ◀◀/▶▶ 18

DECK A EJECT ⏏ 5
DECK B EJECT ⏏ 6
DSG 4
FUNCTION 32
PHONES jack 29
PLAY MODE 20
Remote sensor 3
REPEAT 19
TAPE A ▶ 1
TAPE B ◀▶ 10
TAPE A ■ 2
TAPE B ■ 11

TAPE A ◀◀/▶▶ 34
TAPE B ◀◀/▶▶ 12
TAPE REC ● 8
TAPE II 9
TREBLE 30
TUNER BAND 13
TUNING MODE 14
TUNING +/– 15
VOLUME 16

BUTTON DESCRIPTIONS

I/⏻ (power) 33

Remote Control

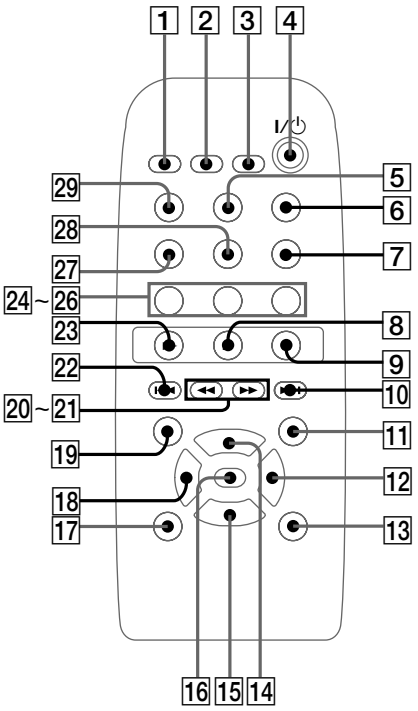

BASS/TREBLE 19
CD 27
DIRECTION 17
DISC1 24
DISC2 25
DISC3 26
DISPLAY 12
DSG 11
ENTER 16
FUNCTION 5
MEMORY 18
PLAY MODE 29
SLEEP 1
STEREO/MONO 13
TAPE A/B 28
TIMER SELECT 2
TIMER SET 3
TUNER/BAND 7
TUNING MODE 6
VOL + 14
VOL – 15

BUTTON DESCRIPTIONS

► 23
❚❚ 8
■ 9
⏮ 22
⏭ 10
◀◀ 20
▶▶ 21
I/⏻ (power) 4

Setting the time

1 **Turn on the system.**

2 **Press TIMER SET on the remote.**
If you are setting the clock for the first time, go to step 5.

3 **Press ⏮/⏭ on the remote repeatedly until "CLOCK" appears in the display.**

4 **Press ENTER on the remote.**
The hour indication flashes.

5 **Press ⏮/⏭ on the remote repeatedly to set the hour.**

6 **Press ENTER on the remote.**
The minute indication flashes.

7 **Press ⏮/⏭ on the remote repeatedly to set the minute.**

8 **Press ENTER on the remote.**
The clock will begin operating.

To reset the system clock
Start over from step 1.

SECTION 3
DISASSEMBLY

• The equipment can be removed using the following procedure.

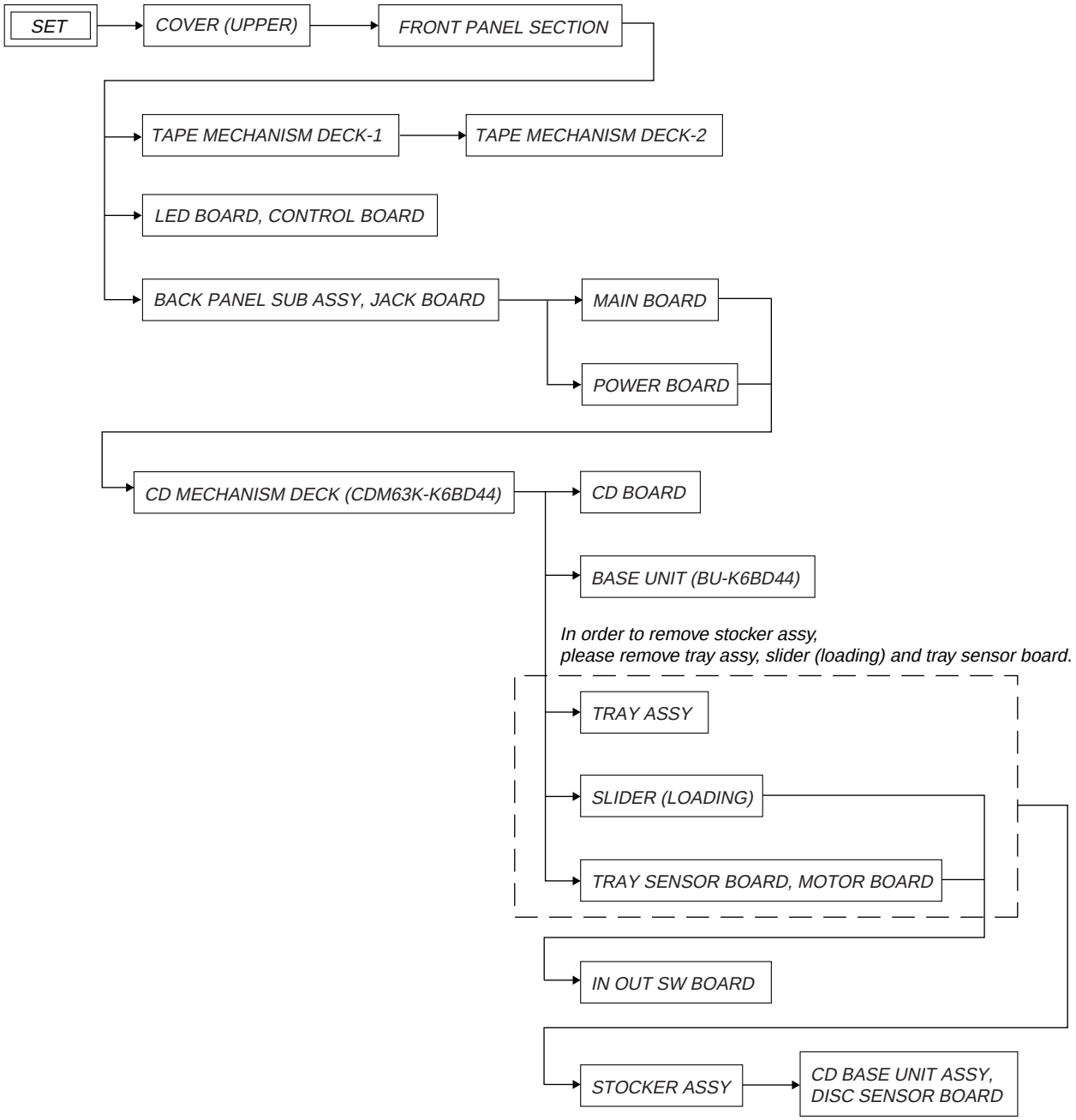

Note : Follow the disassembly procedure in the numerical order given.

3-1. Cover (Upper)

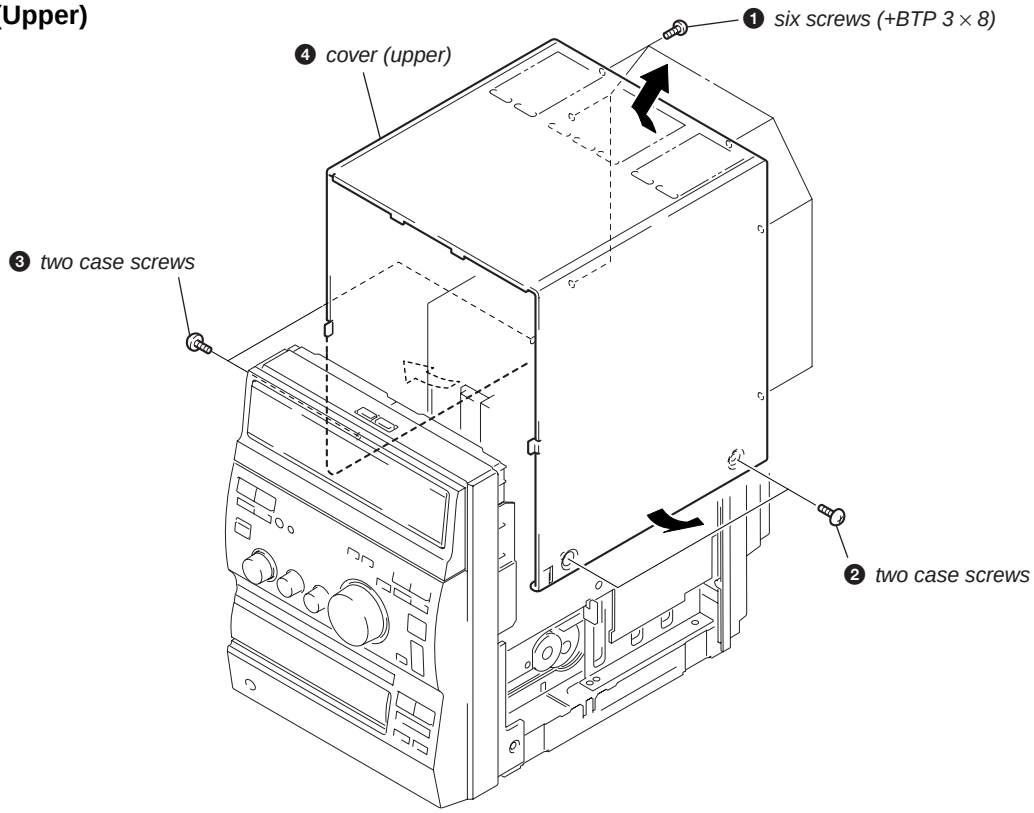

3-2. Front Panel Section

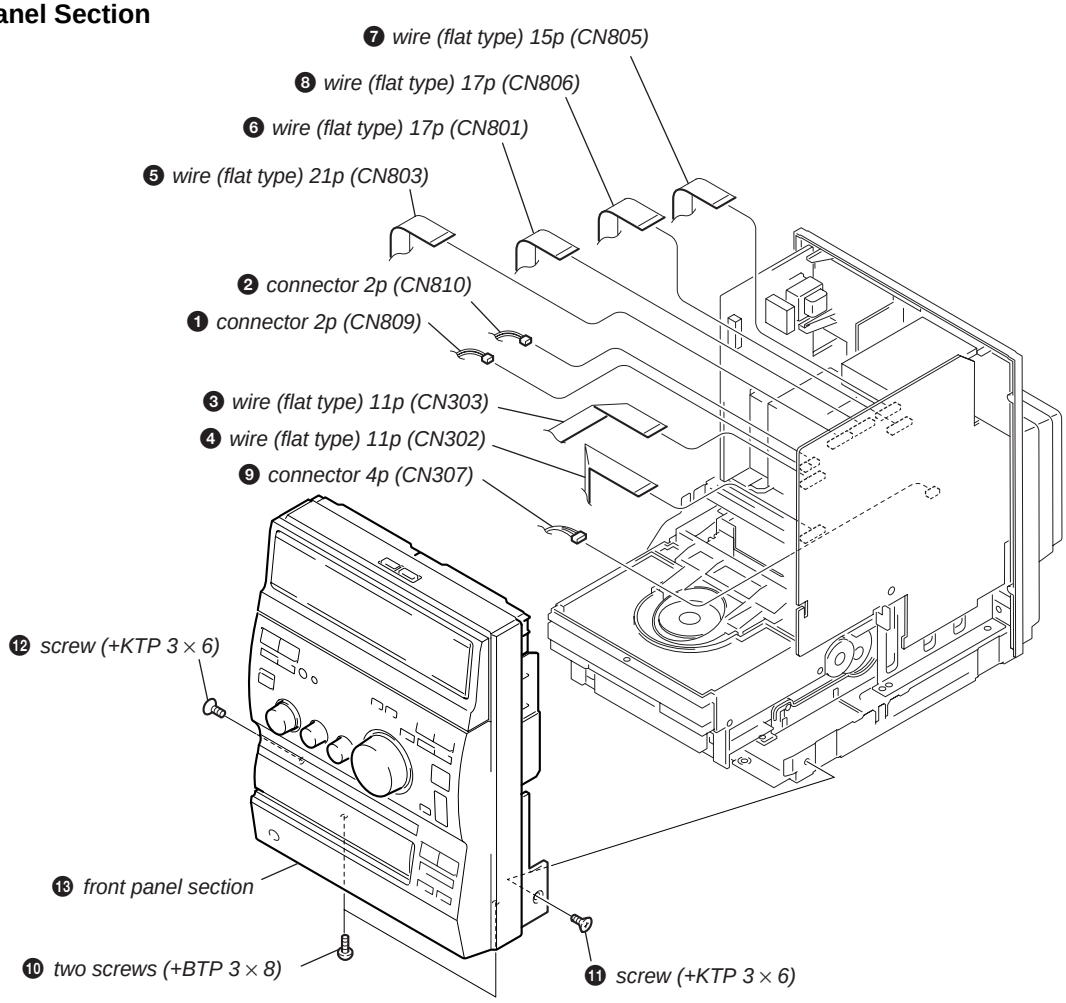

3-3. Tape Mechanism Deck-1

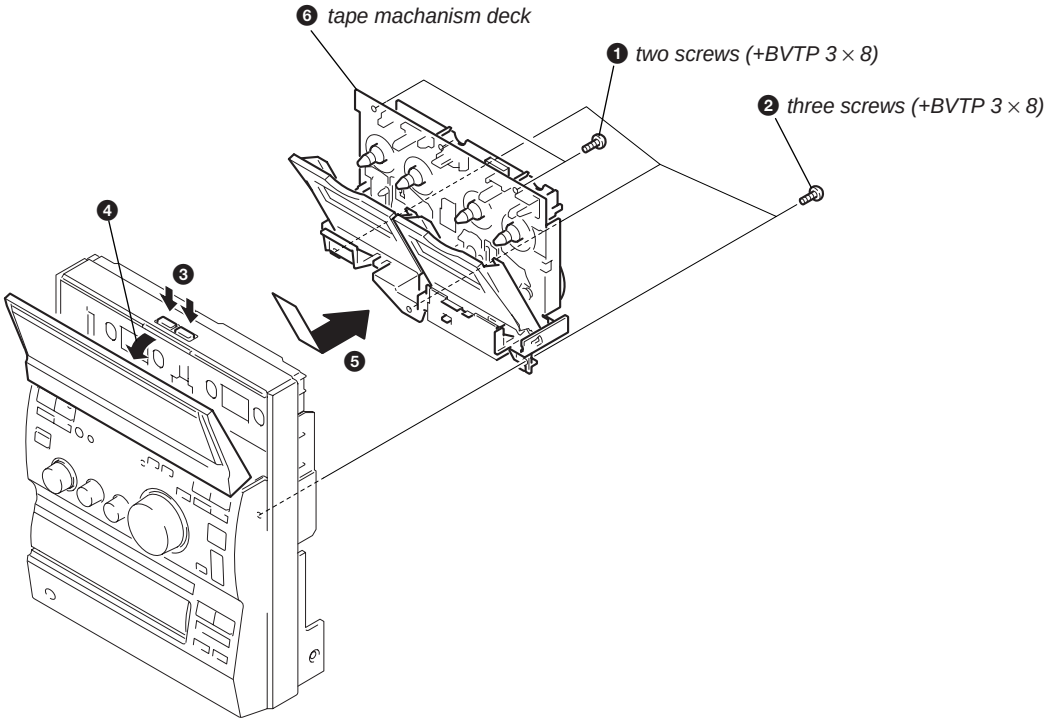

3-4. Tape Mechanism Deck-2

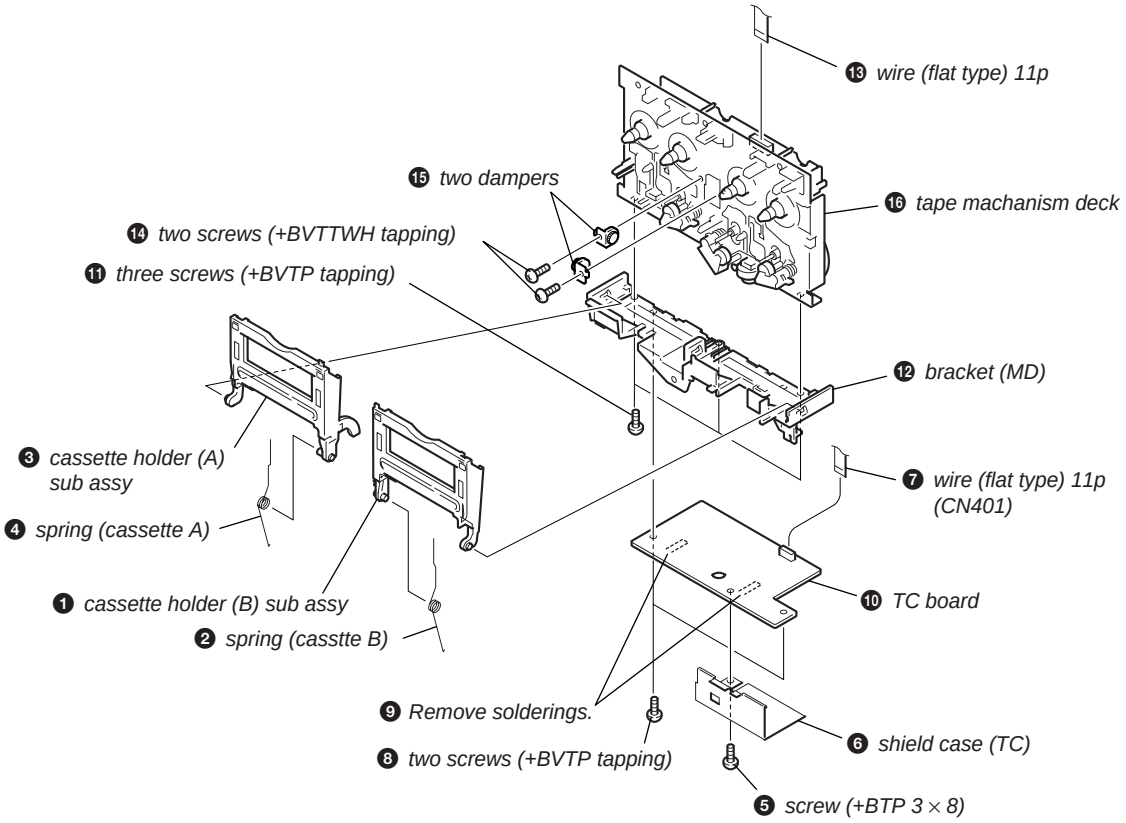

3-5. LED Board, CONTROL Board

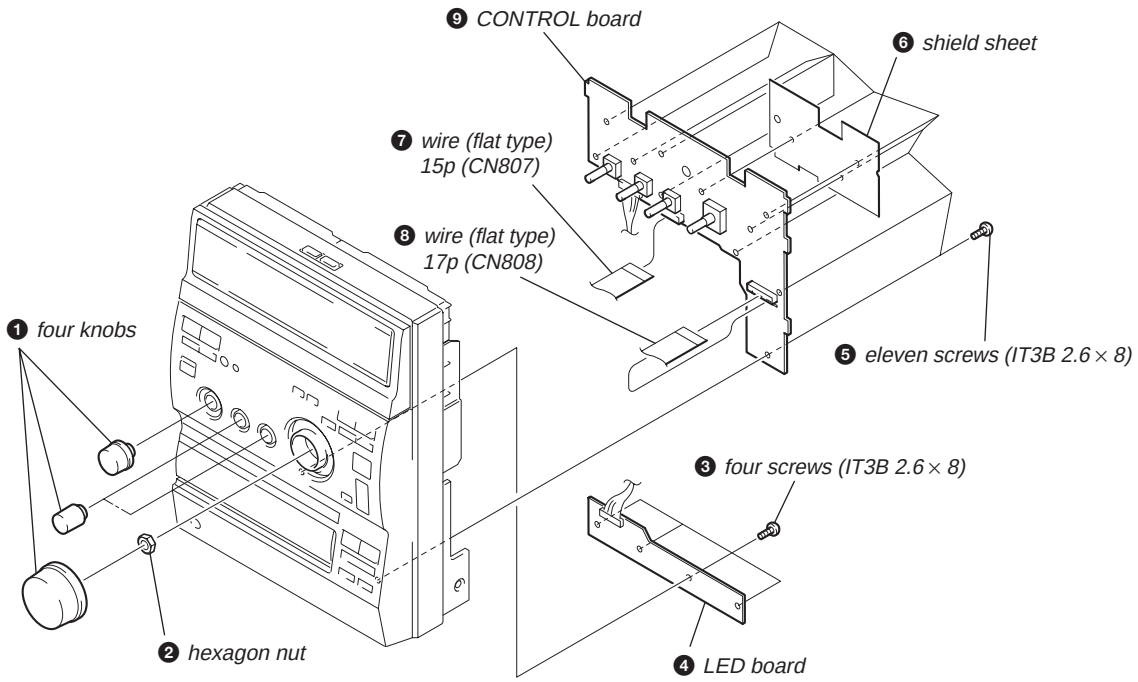

3-6. Back Panel Sub Assy, JACK Board

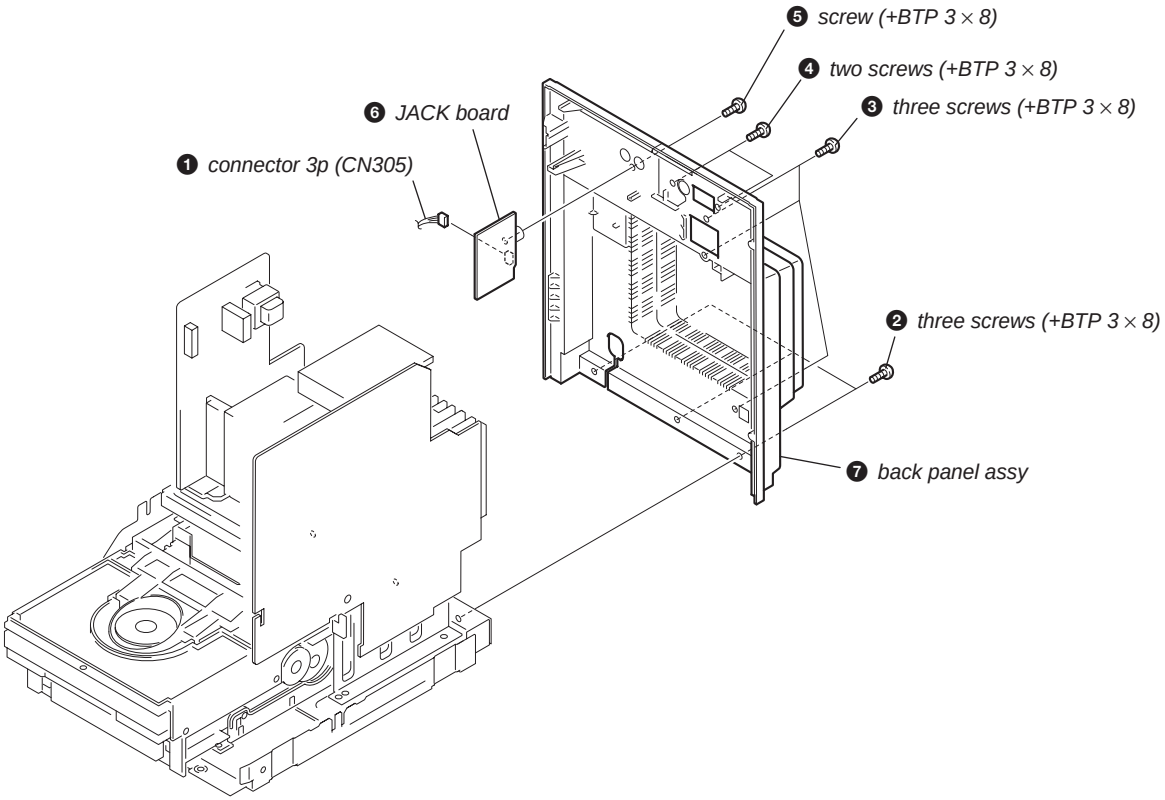

3-7. MAIN Board

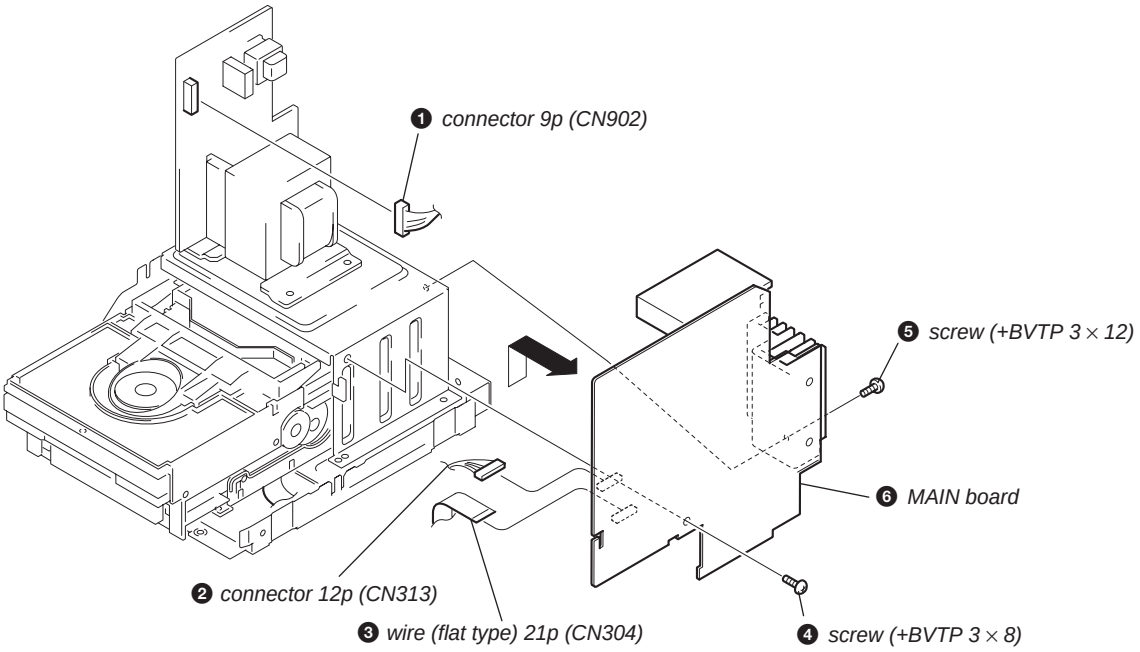

3-8. POWER Board

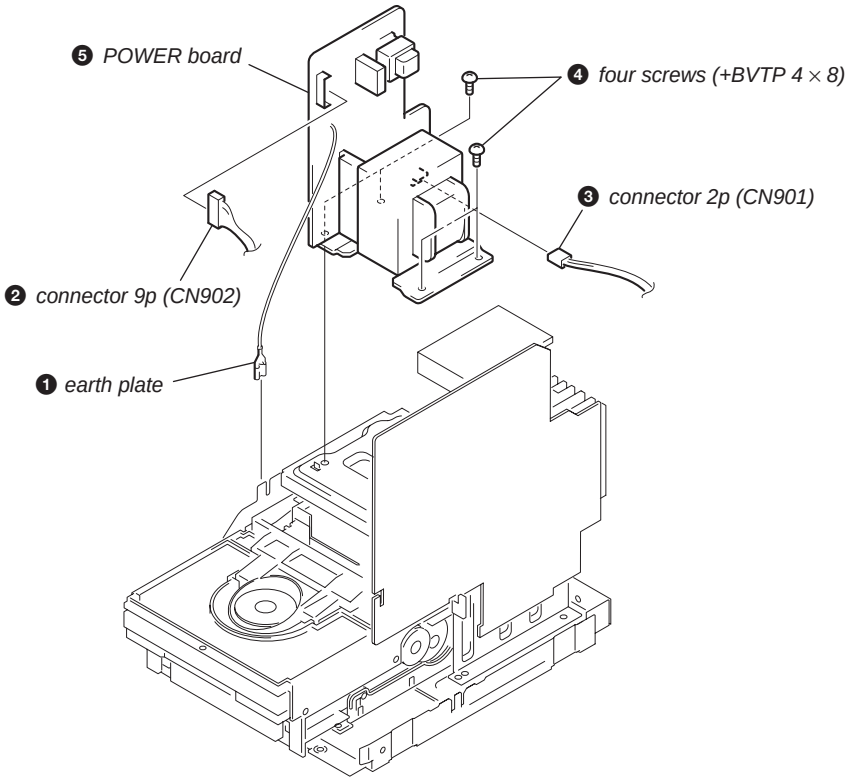

3-9. CD Mechanism Deck (CDM63K-K6BD44)

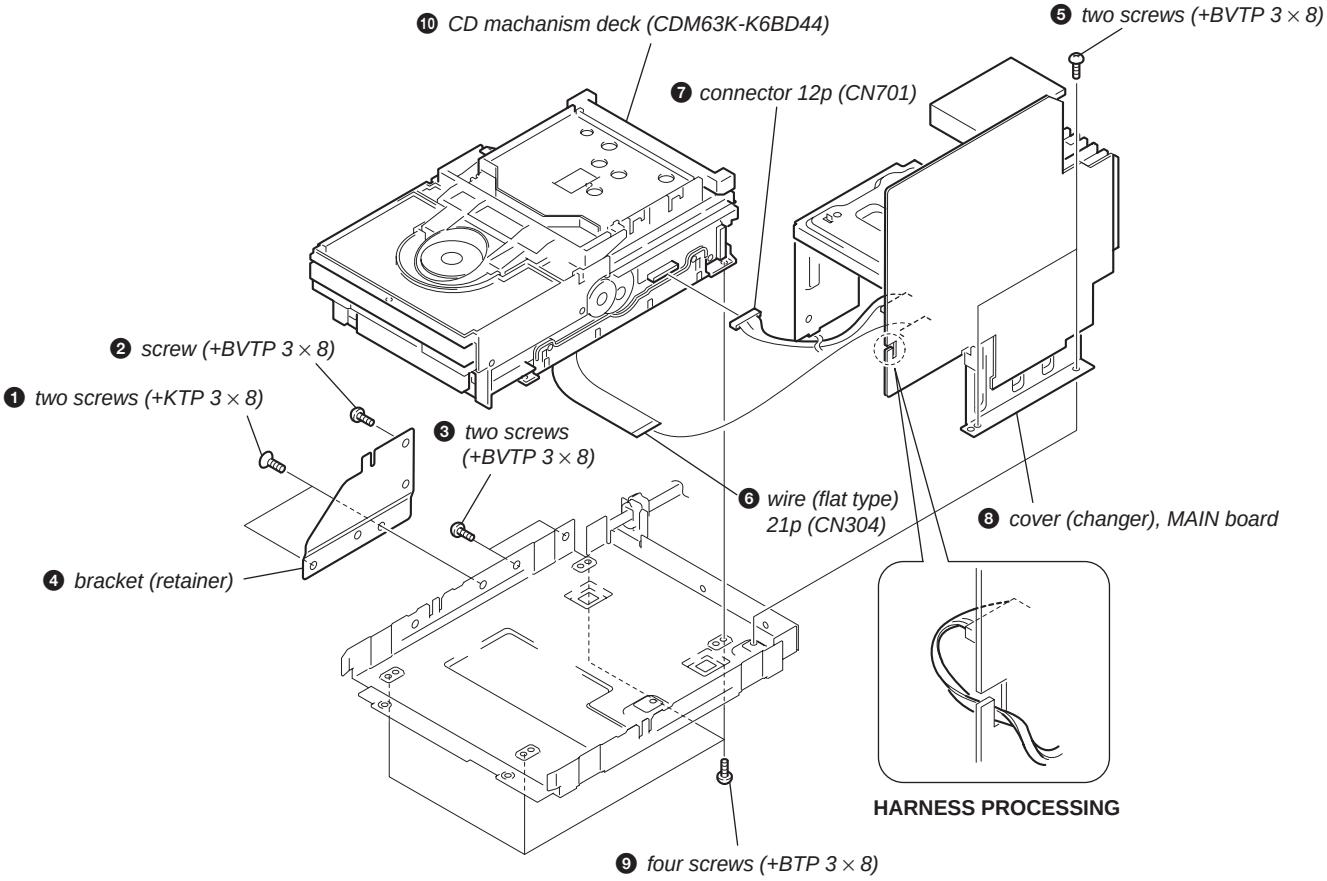

3-10. CD Board

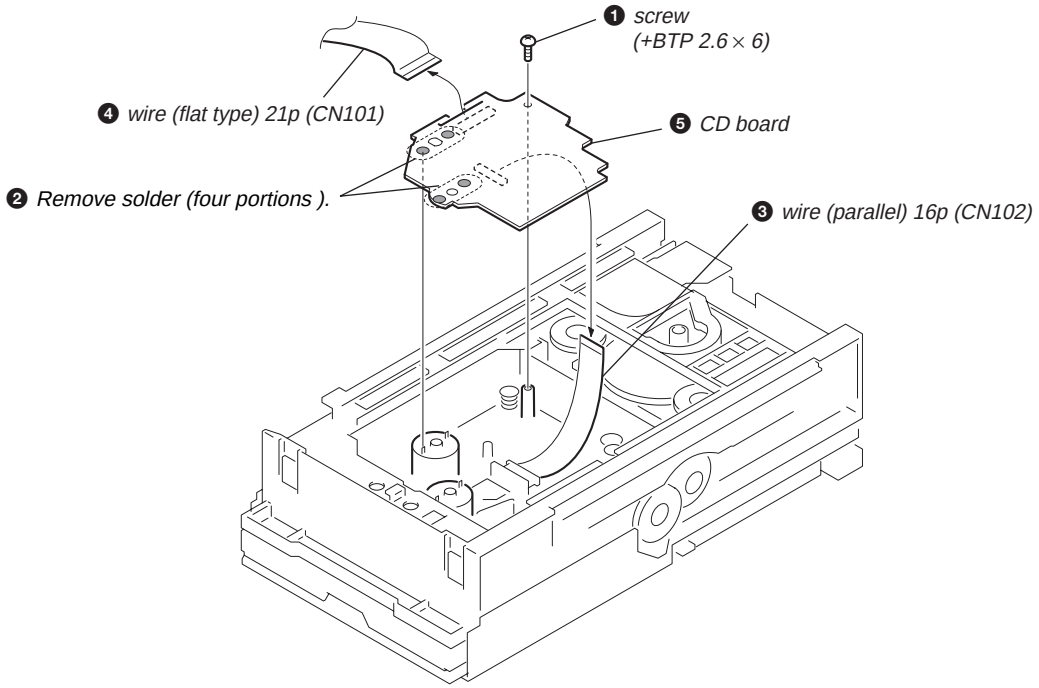

3-11. Base Unit (BU-K6BD44)

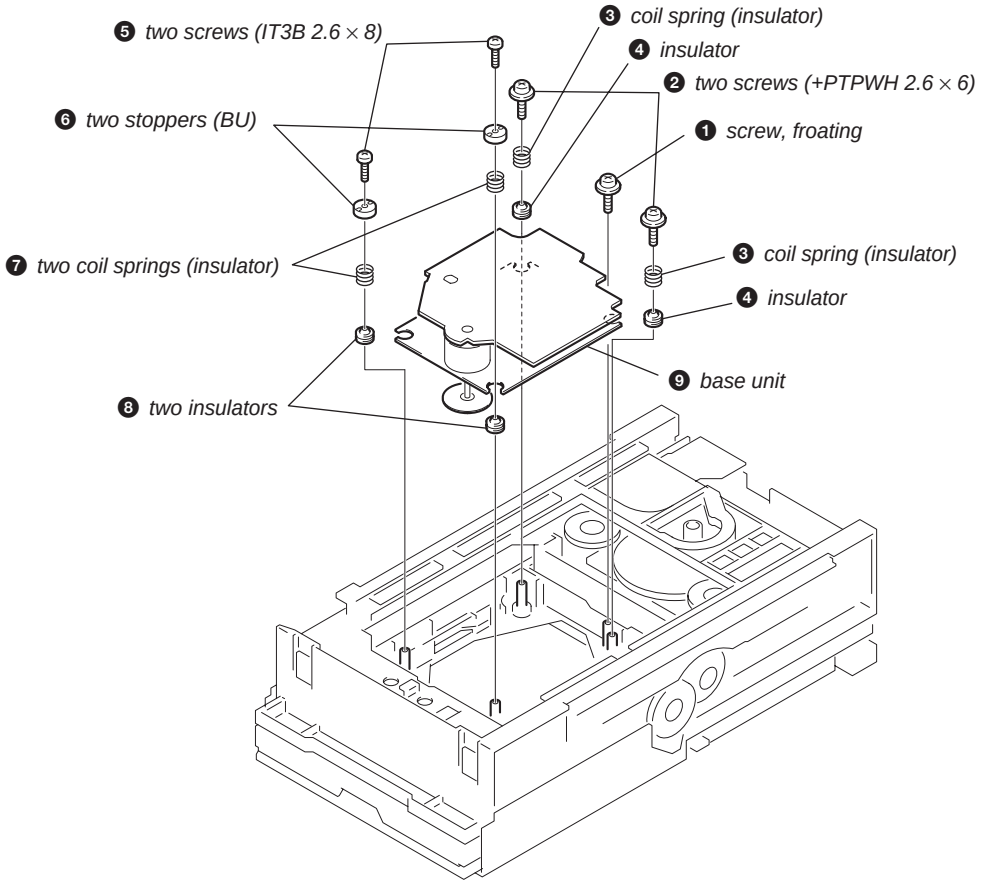

3-12. Tray Assy

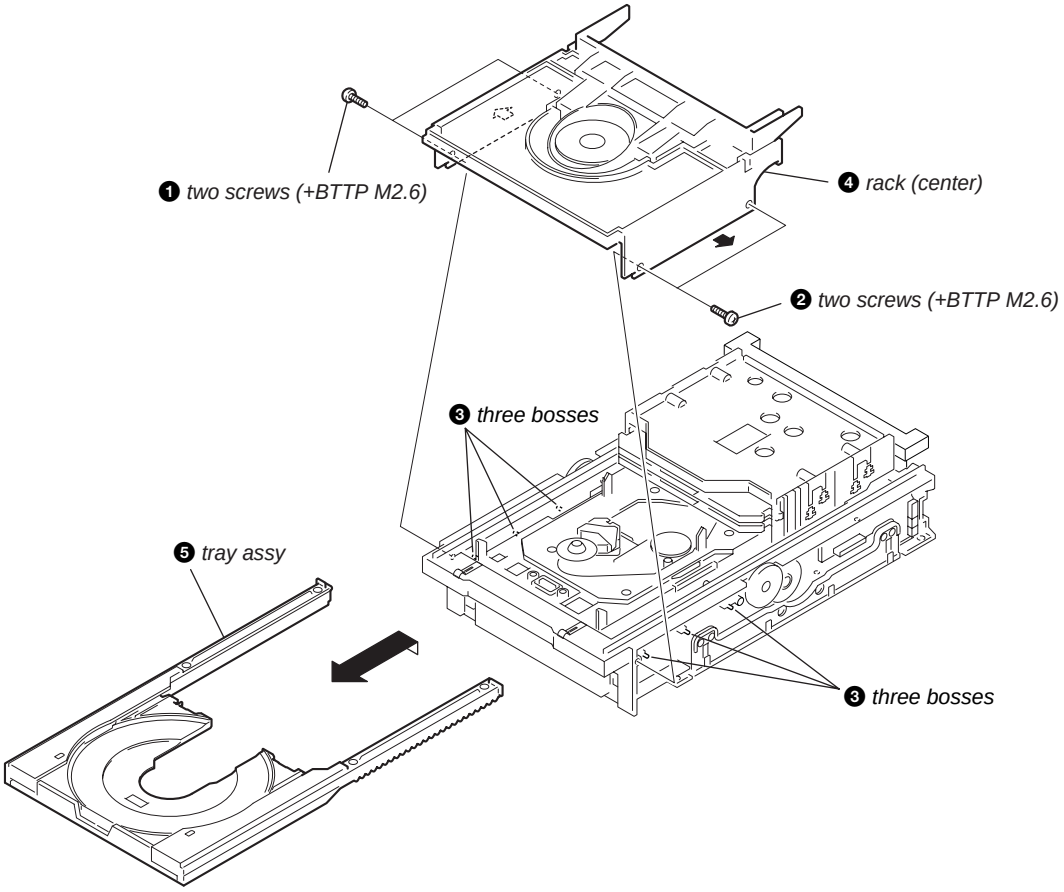

3-13. Silder (Loading)

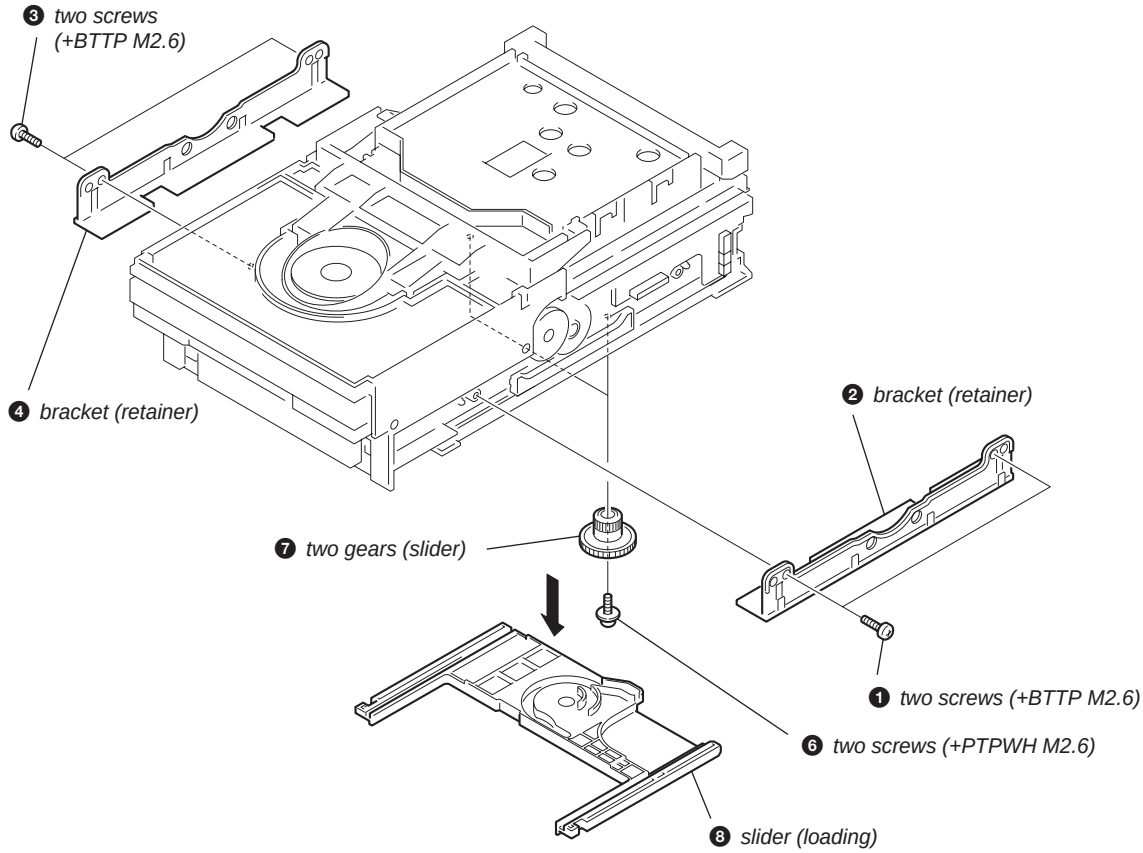

3-14. TRAY SENSOR Board, MOTOR Board

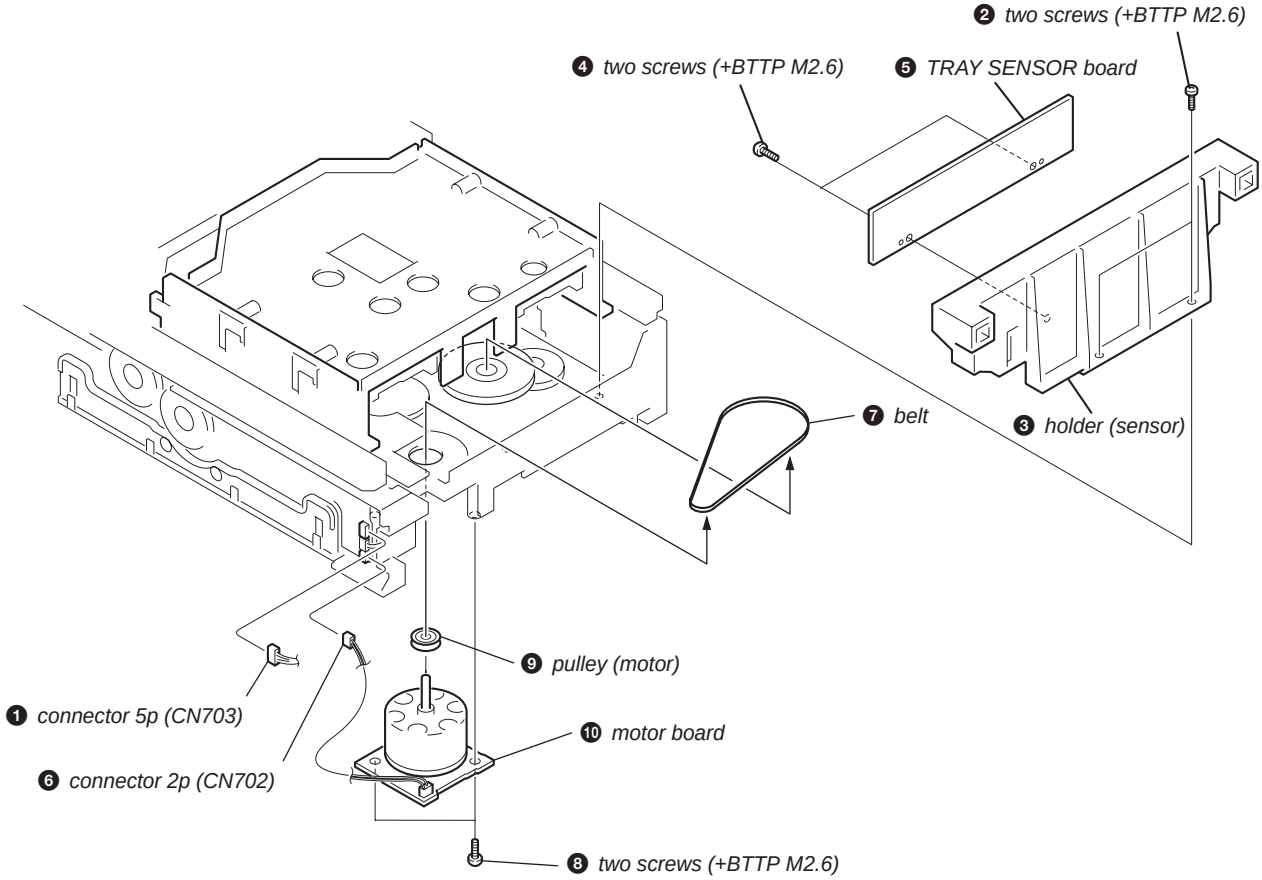

3-15. IN OUT SW Board

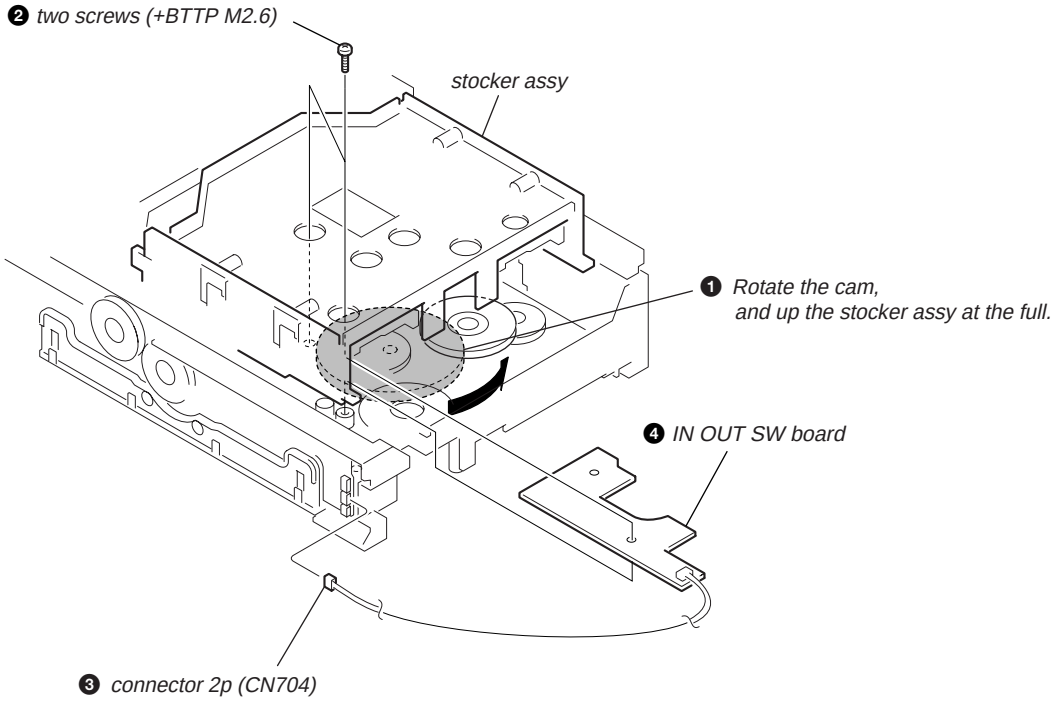

3-16. Stocker Assy

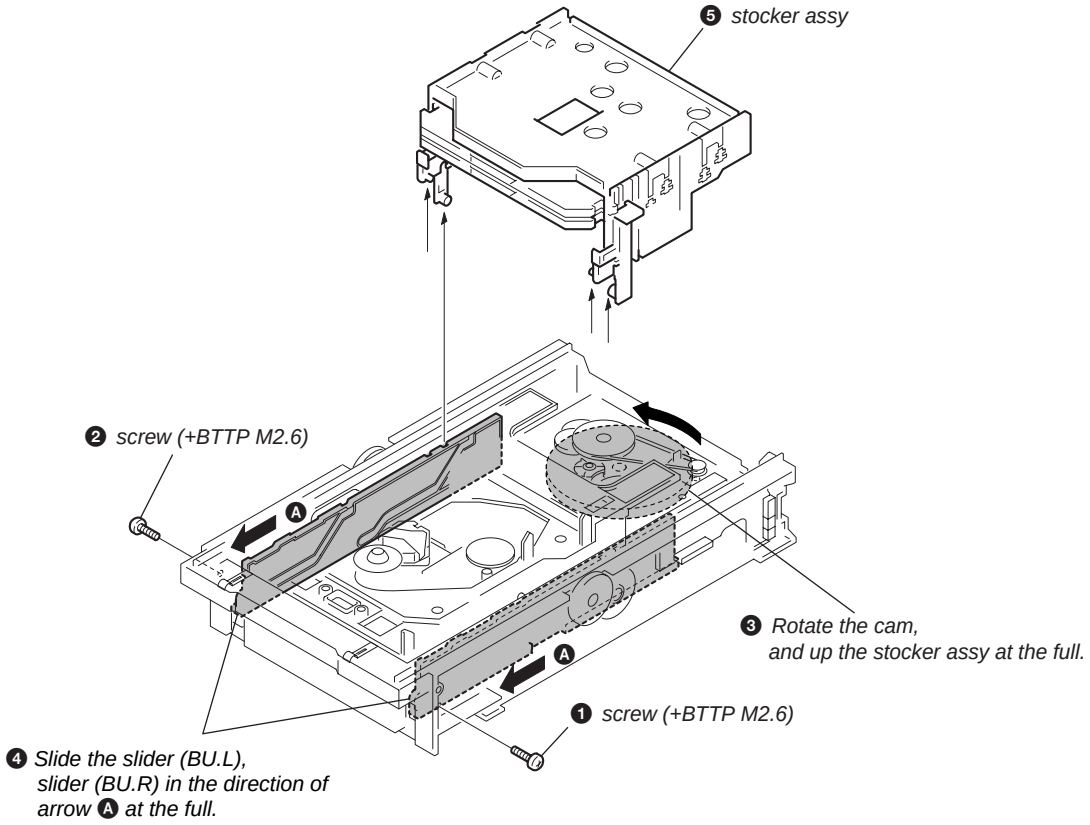

3-17. CD Base Unit Assy, DISC SENSOR Board

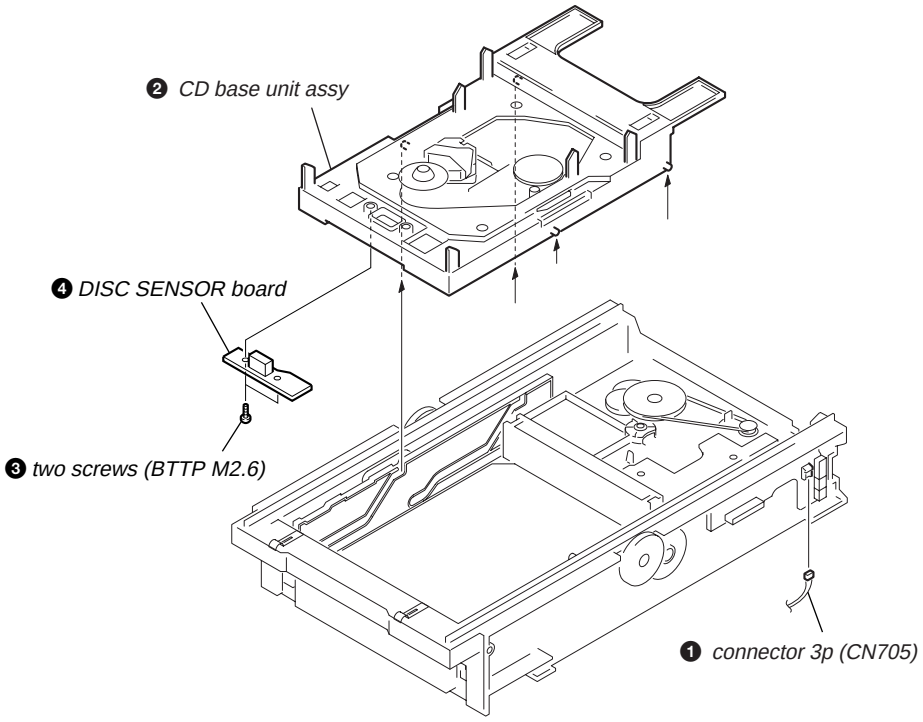

SECTION 4
TEST MODE

[CD Ship Mode]

- This mode moves the optical pick-up to the position durable to vibration. Use this mode when returning the set to the customer after repair.

Procedure:

1. Press the I/⏻ button to turn the set ON.
2. Press three buttons ■ (TAPE A), ■ (CD), and ⏏ (CD1) simultaneously.
3. After the "STANDBY" display blinks six times, a message "LOCK" is displayed on the liquid crystal display, and the CD ship mode is set.

[GC Test Mode]

- This mode is used to check the software version, liquid crystal display and keyboard.

Procedure:

1. Press three buttons ■(TAPE A), ■ (CD) and I/⏻ simultaneously.
2. Segments of the liquid crystal display are all turned on.
3. When you want to enter the software version display mode, press the CD 1 button . The model number and destination are displayed.
4. Each time the CD 1 button is pressed, the display changes starting from MC version, GC version, CD version, CDD version, CDMA version, CDMB version, BDA version, BDB version , ST version, TA version, TM version, TC version and MD version in this order.
5. Press the CD 2 button, and the key check mode is activated.
6. In the key check mode, "K 0 J 0 V 0" is displayed. Each time a button is pressed, "K 0" value increases. However, once a button is pressed, it is no longer taken into account.
   "V 0" value increases like 1, 2, 3 ... if rotating the VOLUME knob clockwise, or it decreases like 0, 9, 8 ... if rotating counterclockwise.
   "J0" value increases if rotating the FUNCTION , BASS or TREBLE knob clockwise, or it decreases if rotating counterclockwise.
7. To exit from this mode, press three buttons in the same manner as step 1, or disconnect the power cord.

[CD Ship (Memory Clear) Mode]

- Set the CD ship mode and set the default setup when shipped from the factory at the next AC power on.

Procedure:

1. Press the I/⏻ button to turn the set ON.
2. Select the function "CD ".
3. Press three buttons ■ (TAPE A), ■ (CD), and ⏏ (CD1) simultaneously.
4. After the "STANDBY" display blinks six times, a message "LOCK" is displayed on the liquid crystal display, and the CD ship mode is set.

SECTION 5
ELECTRICAL ADJUSTMENTS

DECK SECTION 0 dB=0.775 V

Note: Confirm each contents of this section first of all. If the results are not satisfied, do the adjustment.

1. Demagnetize the record/playback head with a head demagnetizer.
2. Do not use a magnetized screwdriver for the adjustments.
3. After the adjustments, apply suitable locking compound to the parts adjust.
4. The adjustments should be performed with the rated power supply voltage unless otherwise noted.
5. The adjustments should be performed in the order given in this service manual. (As a general rule, playback circuit adjustment should be completed before performing recording circuit adjustment.)
6. The adjustments should be performed for both L-CH and R-CH.
7. Switches and controls should be set as follows unless otherwise specified.

• Test Tape

Tape	Signal	Used for
P-4-A63J	10 kHz, –10 dB	Azimuth Adjustment

Record/Playback Head Azimuth Adjustment

Procedure:

1. Mode: Playback

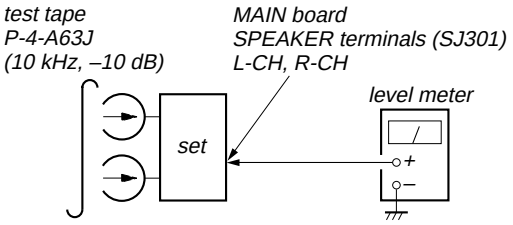

2. Turn the adjustment screw and check output peaks. If the peaks do not match for L-CH and R-CH, turn the adjustment screw so that outputs match within 1dB of peak.

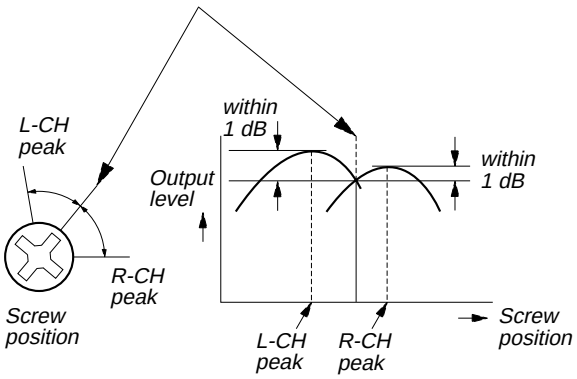

3. Mode: Playback

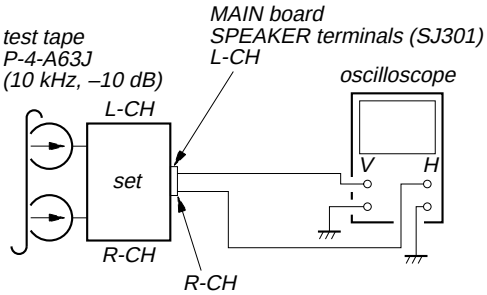

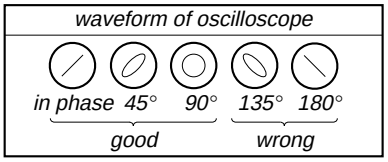

4. Repeat step 1 to 3 in playback (REV) mode.
5. After the adjustments, apply suitable locking compound to the pats adjusted.

CD SECTION

Note:

1. CD Block is basically constructed to operate without adjustment.
2. Use YEDS-18 disc (3-702-101-01) unless otherwise indicated.
3. Use an oscilloscope with more than 10 MΩ impedance.
4. Clean the object lens by an applicator with neutral detergent when the signal level is low than specified value with the following checks.
5. Check the focus bias check when optical block is replaced.

Focus Bias Check

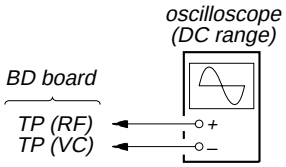

Procedure :

1. Connect oscilloscope to TP (RF) and TP (VC) on the CD board.
2. Press the I/⏻ button to turn the power on, and press the ⏏ (CD) button to open the CD disc tray.
3. Put disc (YEDS-18) in and press the ▶II (CD) button to play-back.
4. Confirm that oscilloscope waveform is as shown in the figure below. (eye pattern)
   A good eye pattern means that the diamond shape (◇) in the center of the waveform can be clearly distinguished.

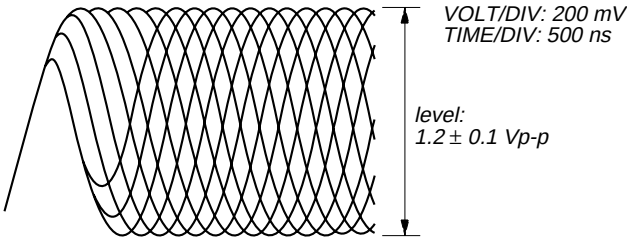

Checking Location:

– CD BOARD (Conductor Side) –

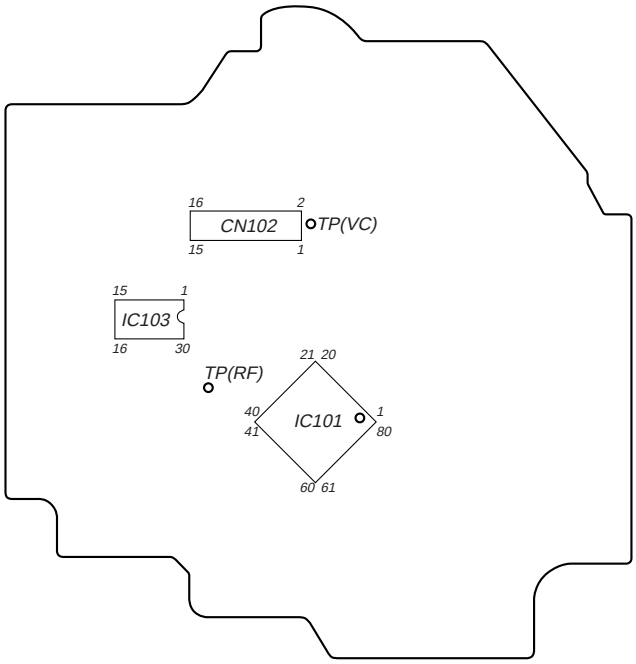

SECTION 6
DIAGRAMS

6-1. Note For Printed Wiring Boards And Schematic Diagrams

Note on Printed Wiring Boards:

- : parts extracted from the component side.
- : parts extracted from the conductor side.
- : indicates side identified with part number.
- : Pattern from the side which enables seeing.
- Indication of transistor.

Caution:	
Pattern face side: (Side A)	Parts on the pattern face side seen from the pattern face are indicated.
Parts face side: (Side B)	Parts on the parts face side seen from the parts face are indicated.

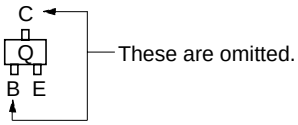

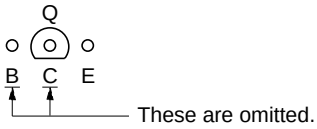

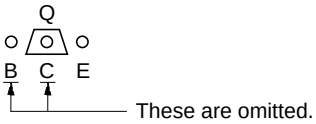

Note on Schematic Diagram:

- All capacitors are in µF unless otherwise noted. pF: µµF 50 WV or less are not indicated except for electrolytics and tantalums.
- All resistors are in Ω and 1/4 W or less unless otherwise specified.
- : internal component.
- : panel designation.

Note:	Note:
The components identified by mark ⚠ or dotted line with mark ⚠ are critical for safety. Replace only with part number specified.	Les composants identifiés par une marque ⚠ sont critiques pour la sécurité. Ne les remplacer que par une pièce portant le numéro spécifié.

- : B+ Line.
- : B– Line.
- : adjustment for repair.
- Voltages are taken with a VOM (Input impedance 10 MΩ). Voltage variations may be noted due to normal production tolerances.
- Waveforms are taken with a oscilloscope. Voltage variations may be noted due to normal production tolerances.
- Circled numbers refer to waveforms.
- Signal path.
  - : FM
  - : PB (DECK A)
  - : PB (DECK B)
  - : REC (DECK B)
  - : CD
  - : DIGITAL OUT
  - : MD
- Abbreviation
  - CND : Canadian model
  - E51 : Chilean and peruvian model

6-2. Block Diagrams – TUNER/CD Section –

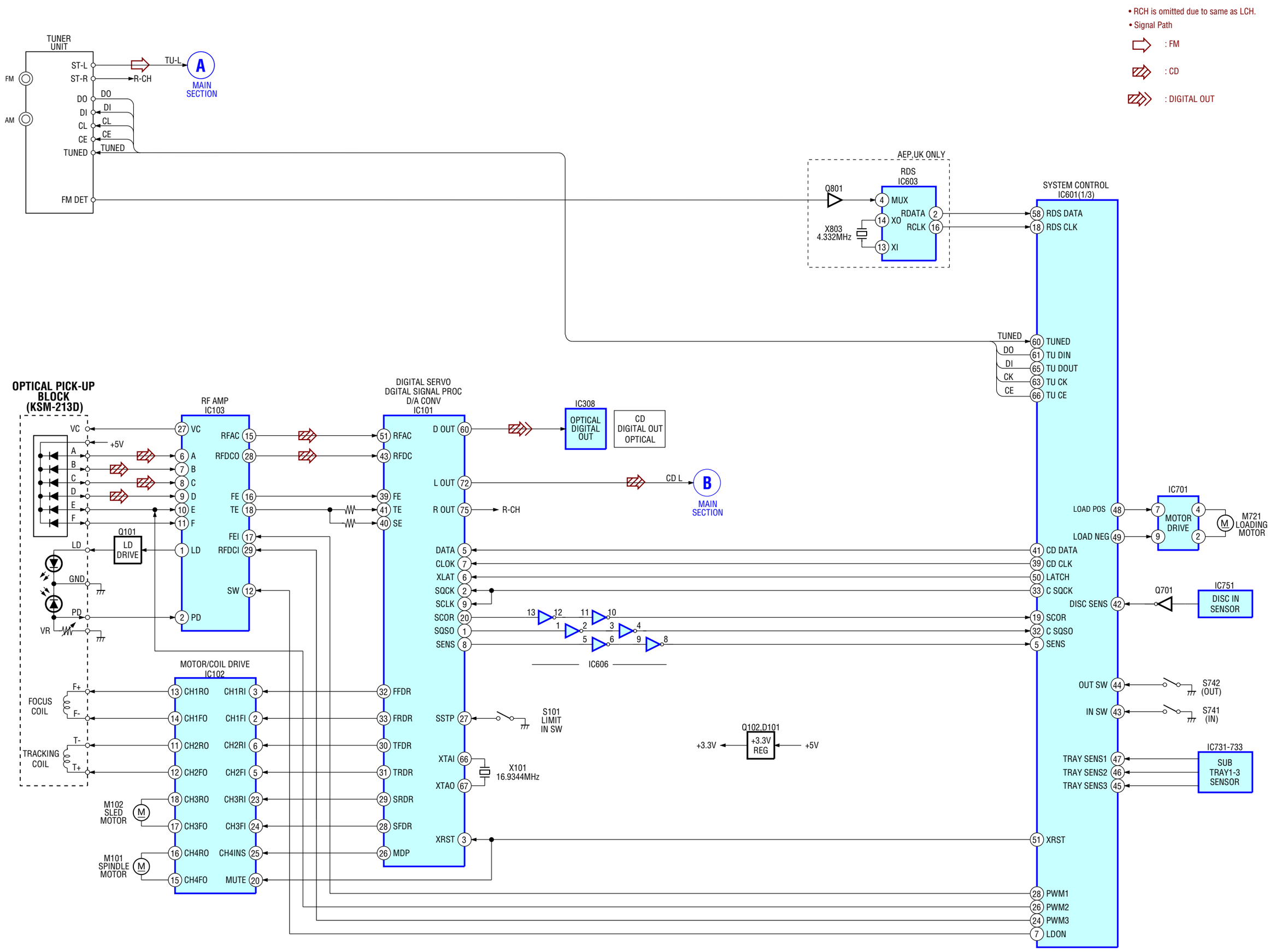

– MAIN Section –

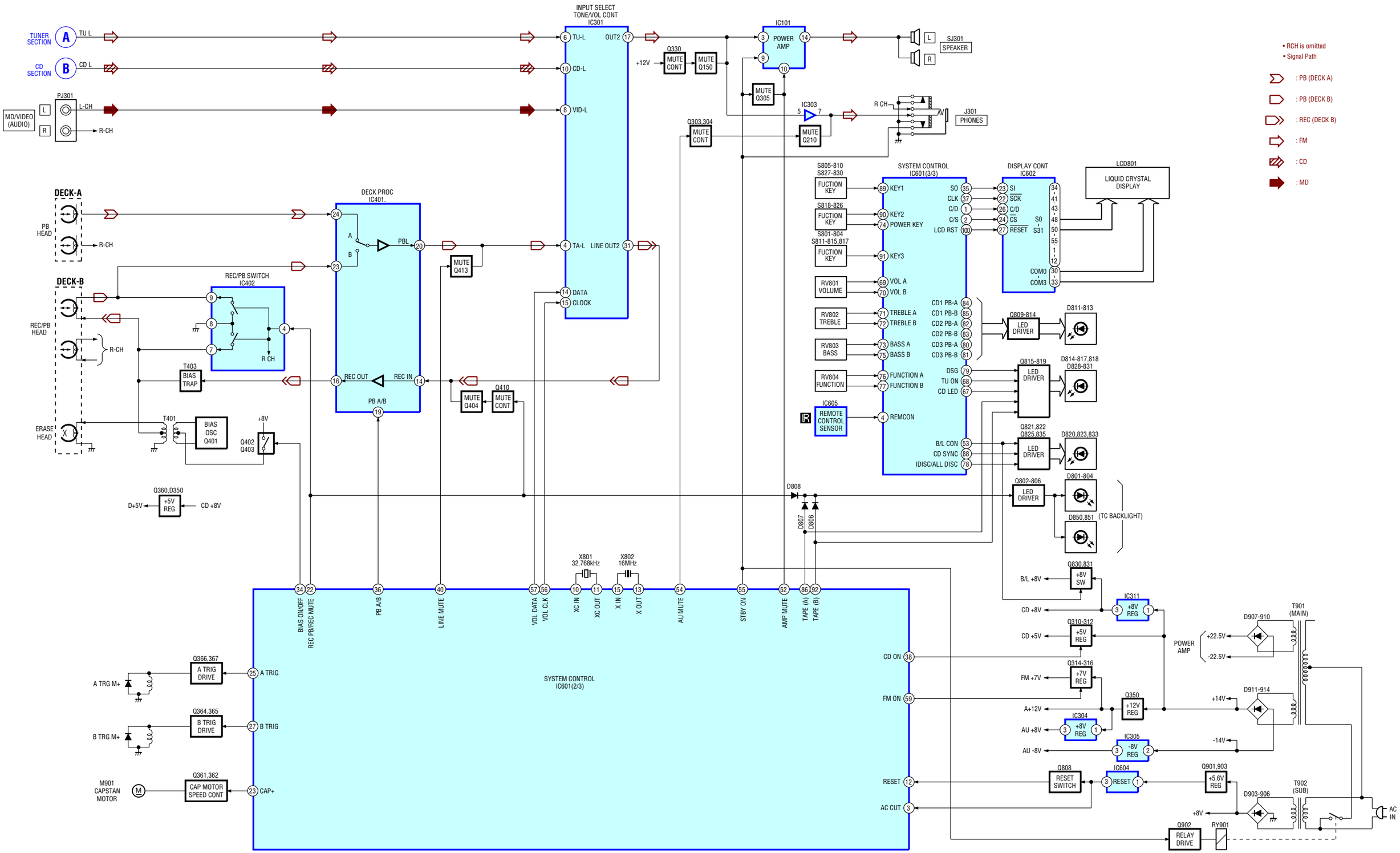

6-3. Circuit Boards Location

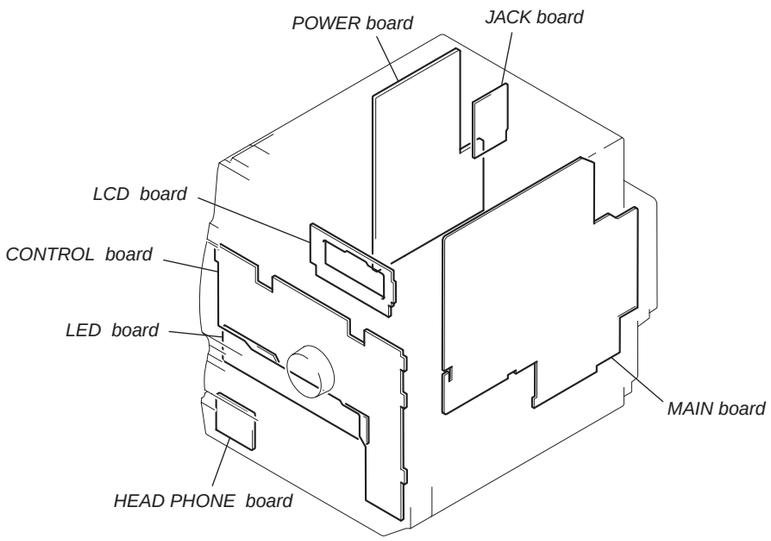

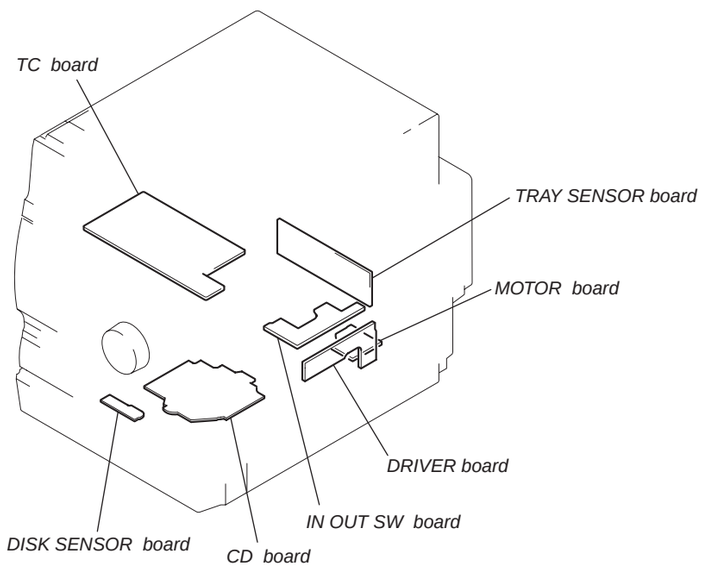

- **WAVEFORMS**

– CD Board –

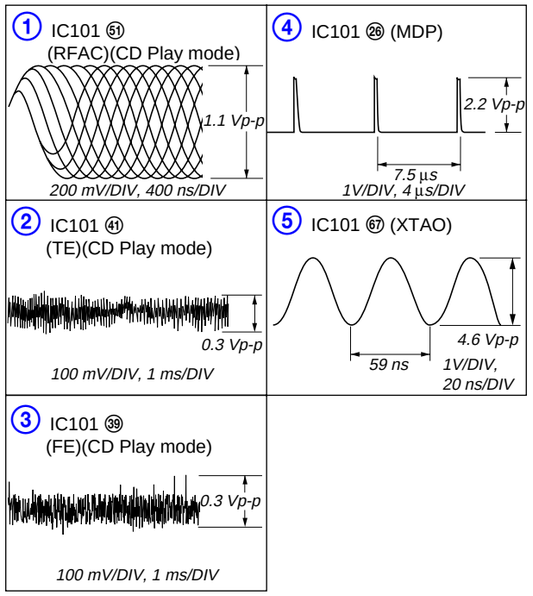

– MAIN Board –

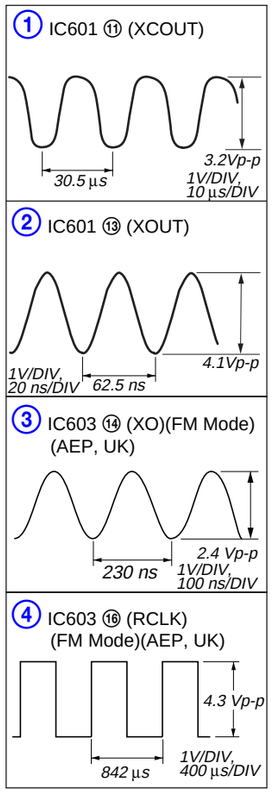

– TC Board –

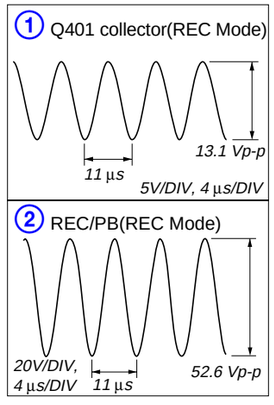

23

6-4. Printed Wiring Board – CD Board –

• See page 23 for Circuit Boards Location.

【CD BOARD】

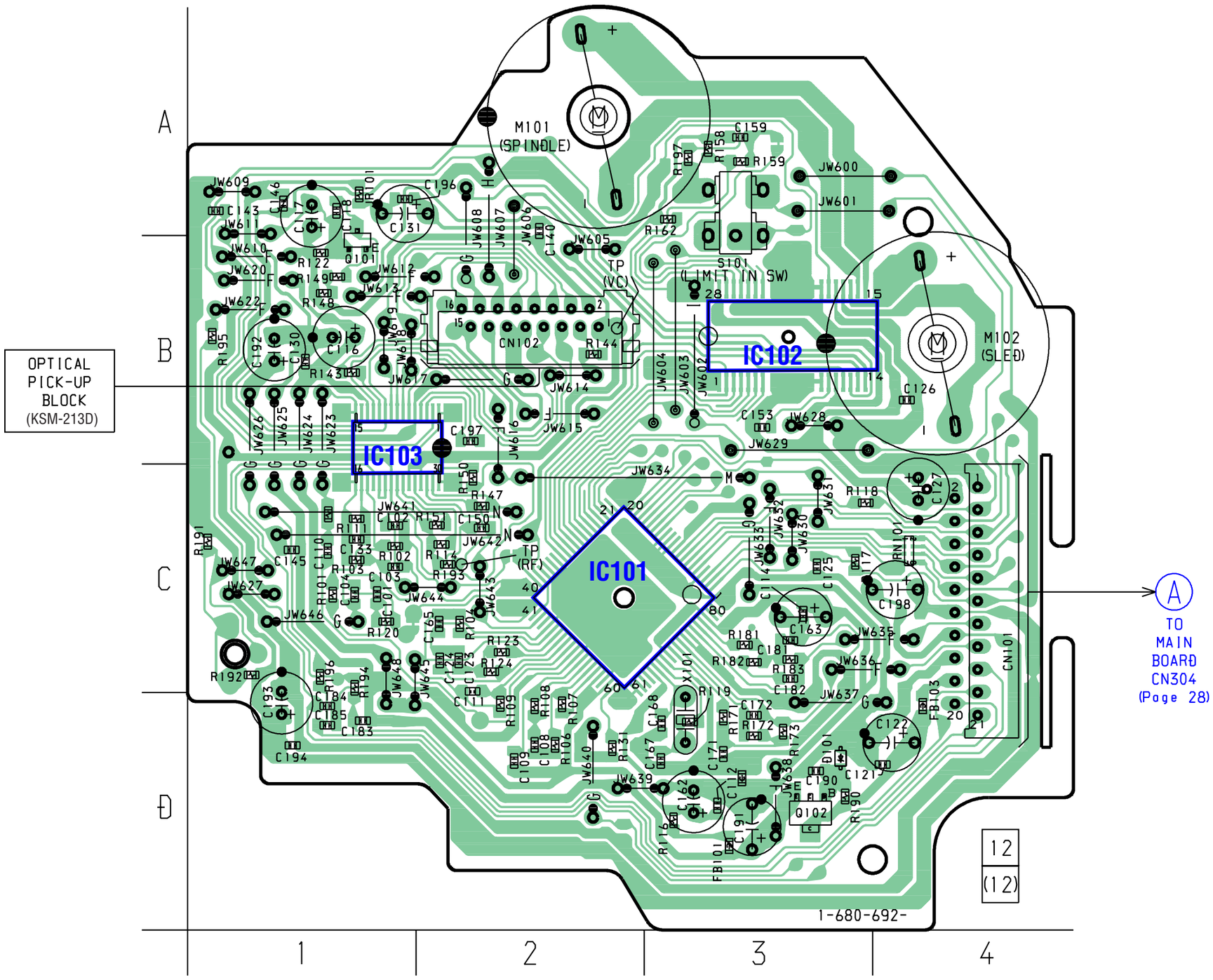

• Semiconductor Location

Ref. No.	Location
D101	D-3
IC101	C-2
IC102	B-3
IC103	C-1
Q101	B-1
Q102	D-3

6-5. Schematic Diagram – CD Board –

• See page 23 for Waveforms. • See page 42, 43 for IC Block Diagrams.

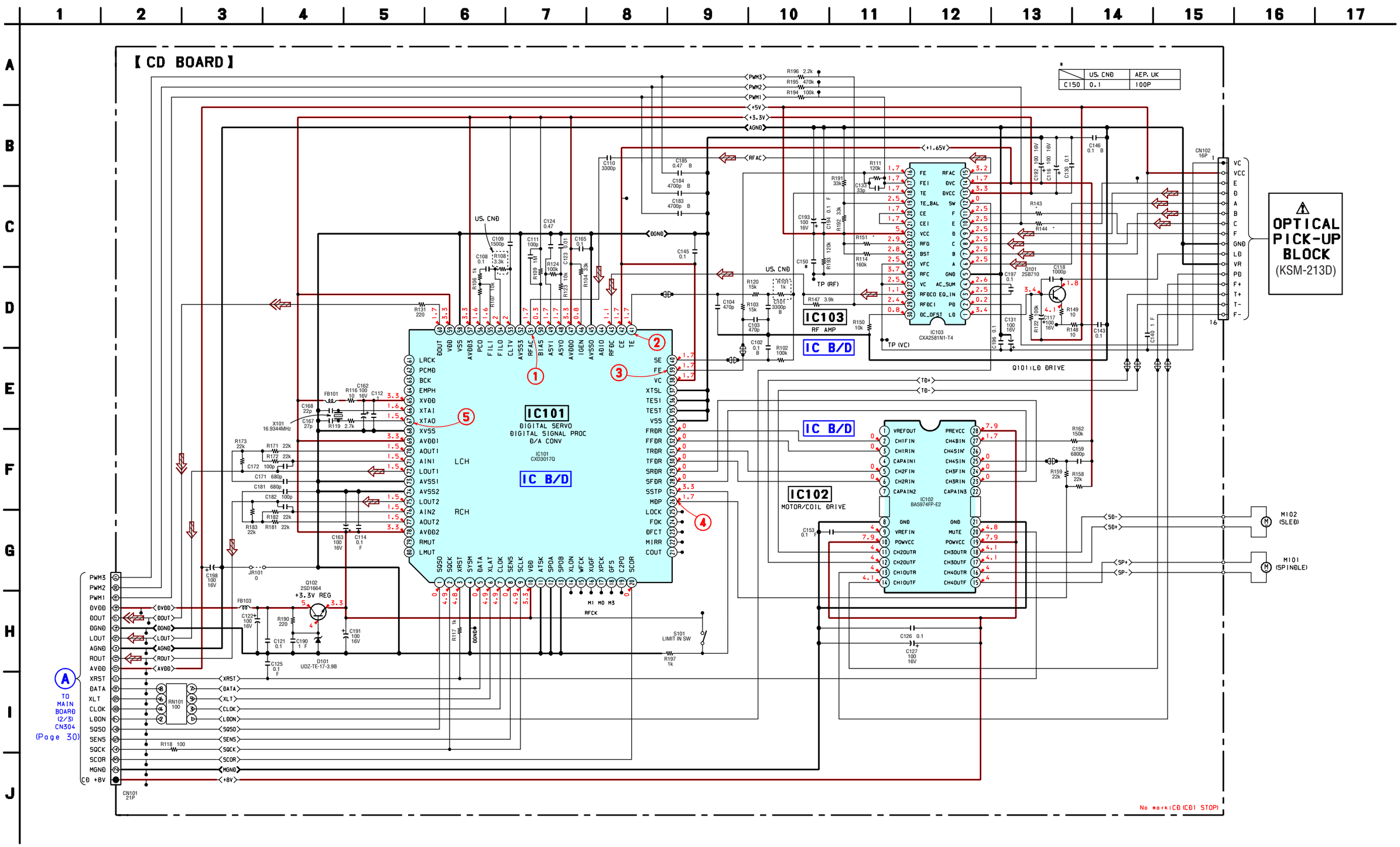

6-6. Printed Wiring Board – TC Board –

• See page 23 for Circuit Boards Location.

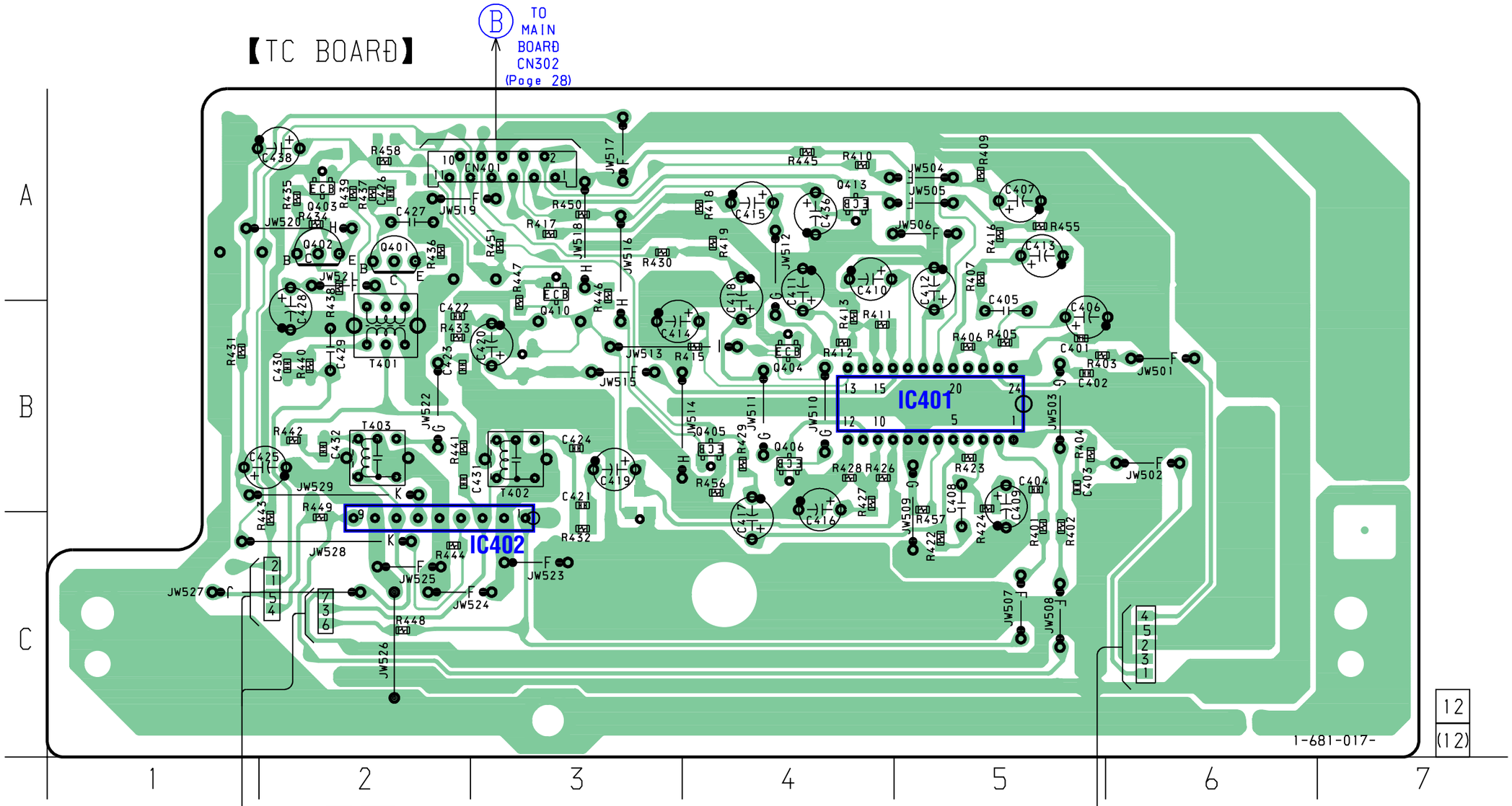

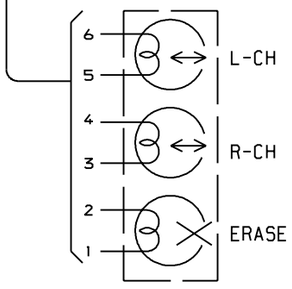

B DECK
RECORD/PLAYBACK/ERASE

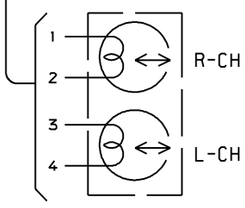

A DECK PLAYBACK

• **Semiconductor Location**

Ref. No.	Location
IC401	B-5
IC402	C-3
Q401	A-2
Q402	A-2
Q403	A-2
Q404	B-4
Q405	B-4
Q406	B-4
Q410	B-3
Q413	A-4

6-7. Schematic Diagram – TC Board –

• See page 23 for Waveforms. • See page 42 for IC Block Diagram.

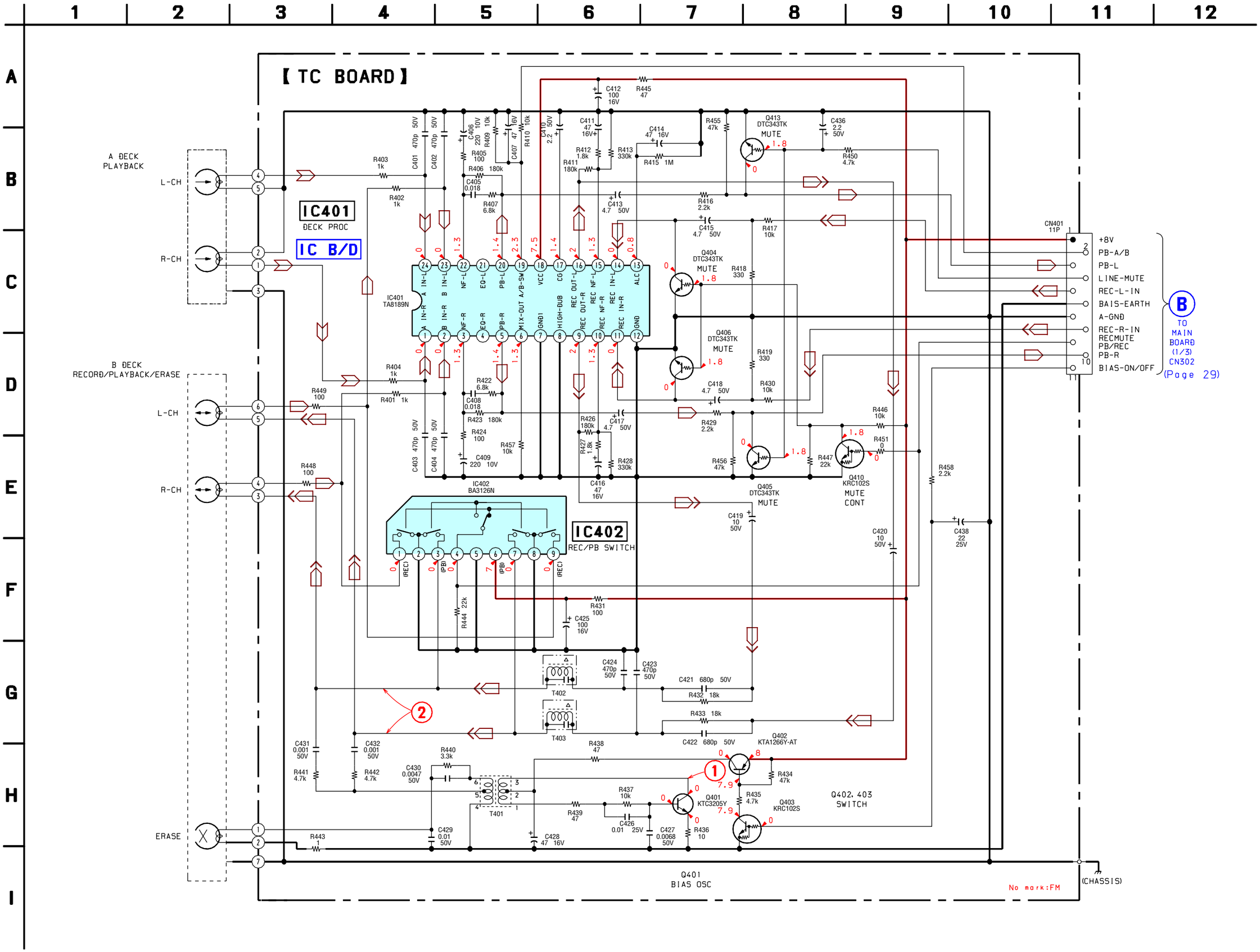

6-8. Printed Wiring Board – MAIN Board –

• See page 23 for Circuit Boards Location.

【MAIN BOARD】

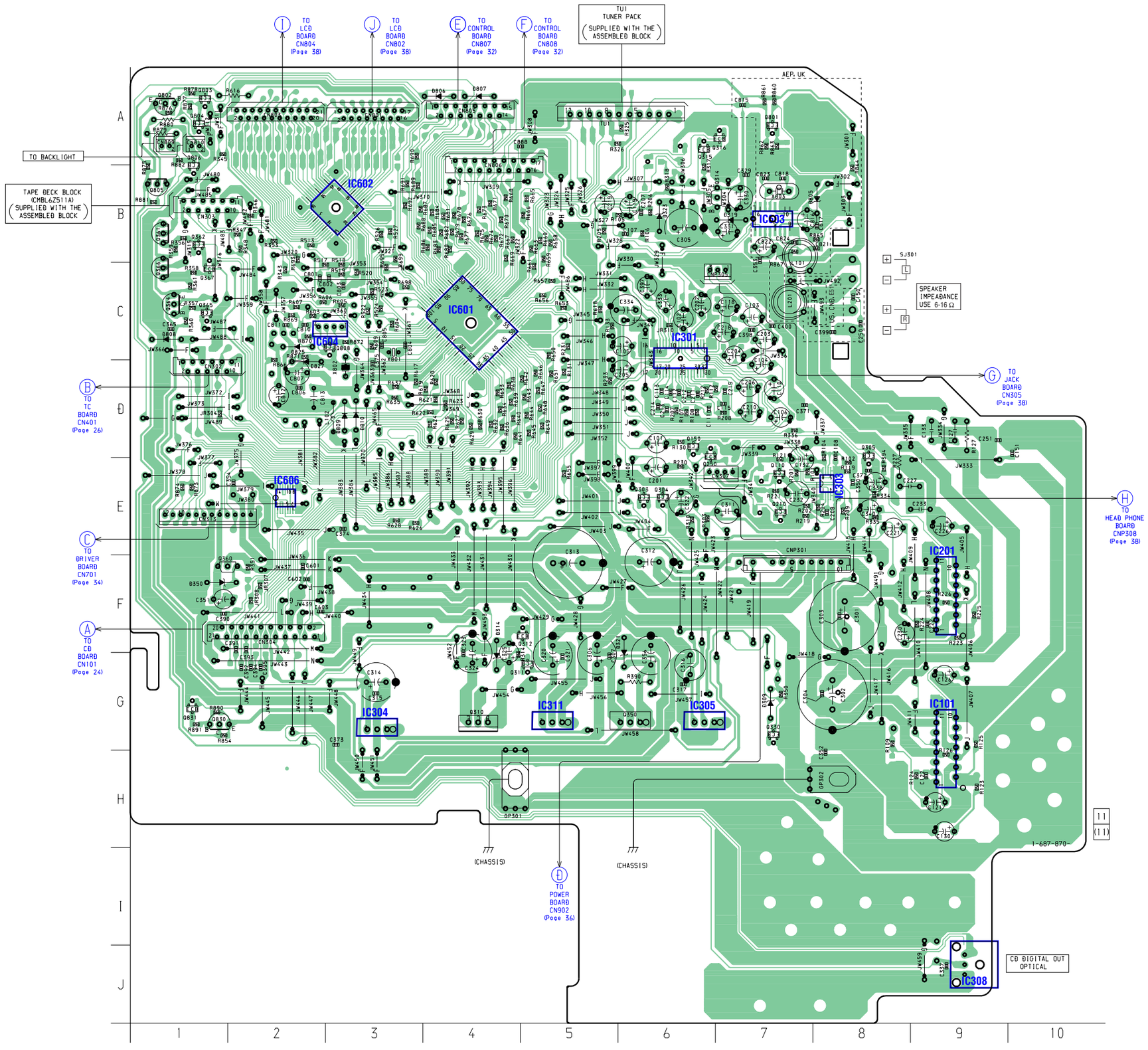

• **Semiconductor Location**

Ref. No.	Location
D309	C-7
D314	F-4
D319	B-8
D321	F-5
D323	B-6
D350	F-1
D805	B-7
D806	A-4
D807	A-4
D808	C-1
D809	D-3
D810	D-3
D825	C-2
D827	D-2
IC101	G-9
IC201	E-9
IC301	C-6
IC303	E-8
IC304	G-3
IC305	G-6
IC308	J-9
IC311	G-5
IC601	C-4
IC602	B-3
IC603	B-7
IC604	C-2
IC606	E-2
Q110	E-7
Q150	D-6
Q210	E-7
Q250	E-6
Q303	E-6
Q304	E-6
Q305	D-8
Q310	G-4
Q311	G-4
Q312	F-4
Q314	B-6
Q315	A-6
Q316	A-6
Q330	G-7
Q350	G-6
Q360	F-1
Q361	B-1
Q362	B-1
Q364	C-1
Q365	C-1
Q366	C-1
Q367	C-1
Q801	A-7
Q802	A-1
Q803	A-1
Q804	A-1
Q805	B-1
Q806	A-1
Q808	C-3
Q830	G-1
Q831	G-1

28

6-9. Schematic Diagram – MAIN Board (1/3) – • See page 41 for IC Block Diagrams.

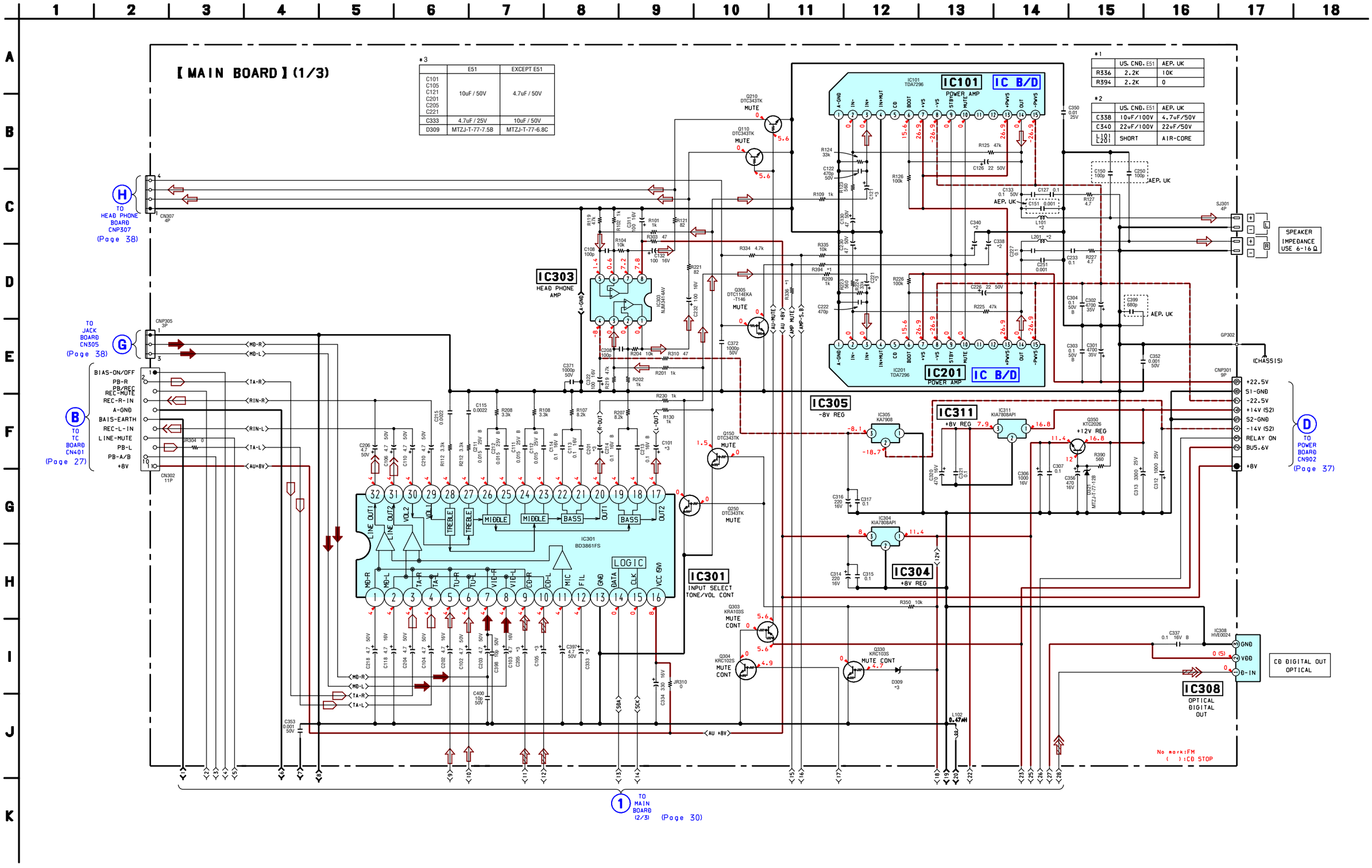

6-10. Schematic Diagram – MAIN Board (2/3) –

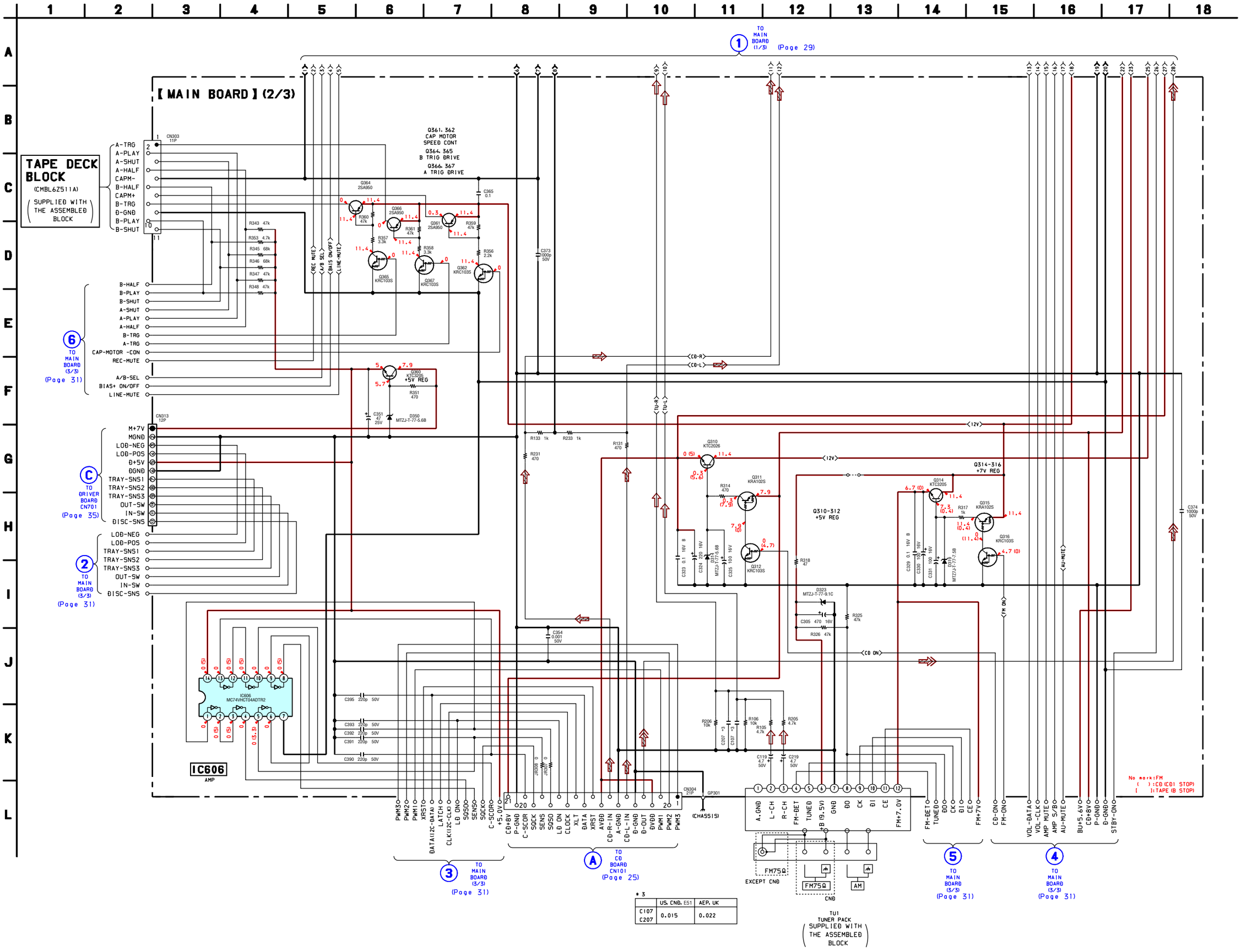

* 3

	US. CND. E51	AEP. UK
C107 C207	0.015	0.022

6-11. Schematic Diagram – MAIN Board (3/3) – • See page 23 for Waveforms. • See page 41 for IC Block Diagrams. • See page 39 for IC Pin Function Description.

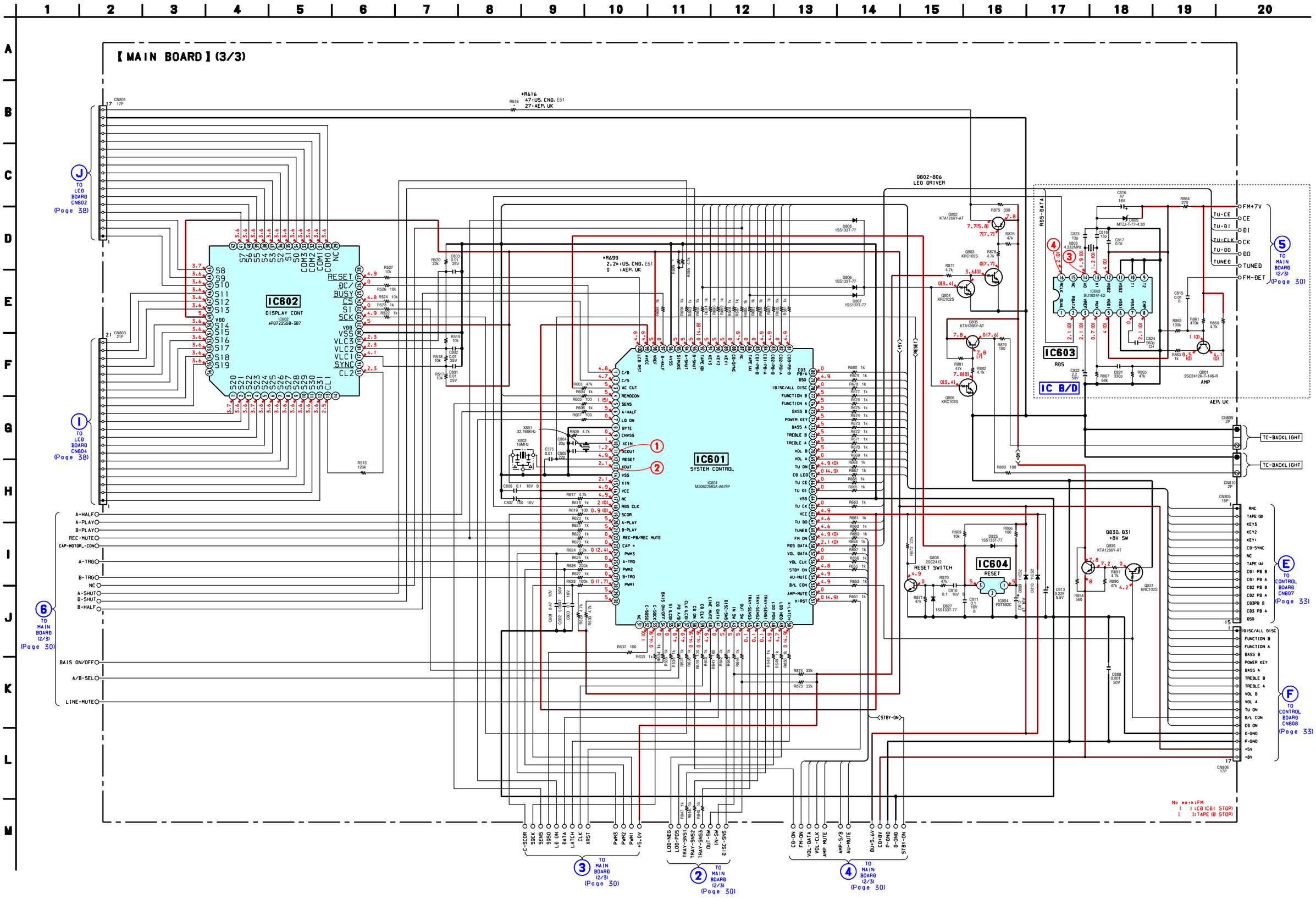

6-12. Printed Wiring Board – CONTROL Board –

• See page 23 for Circuit Boards Location.

• **Semiconductor Location**

Ref. No.	Location
D814	E-1
D815	E-2
D816	B-1
D817	B-2
D818	A-1
D820	B-8
D823	A-4
D828	A-8
D829	A-7
D830	A-2
D831	A-1
D833	F-2
IC605	B-7
Q815	E-1
Q816	B-1
Q817	B-7
Q818	A-1
Q819	A-6
Q821	B-8
Q822	B-8
Q825	A-4
Q853	F-2

【CONTROL BOARD】

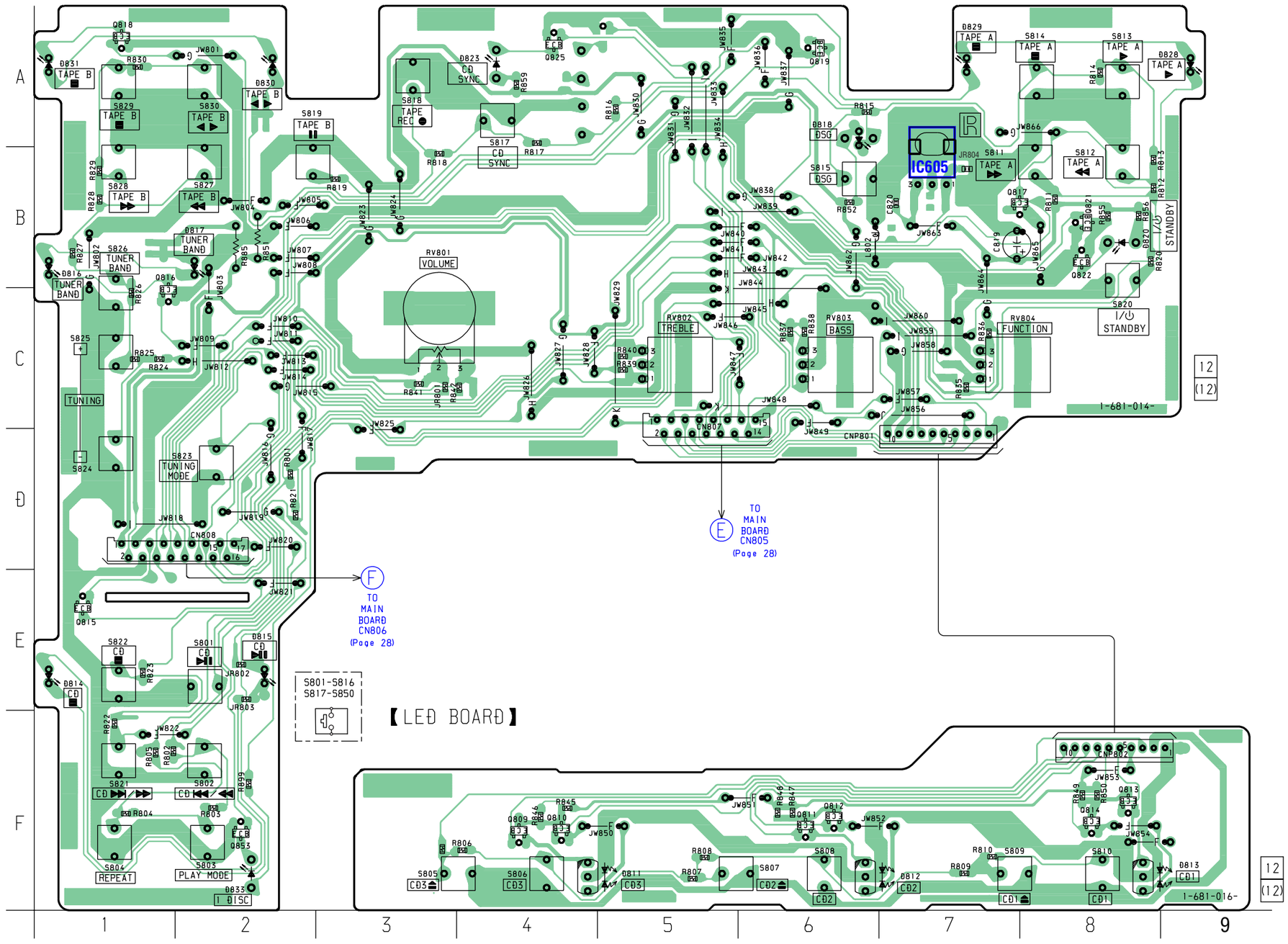

6-13. Schematic Diagram – CONTROL Section –

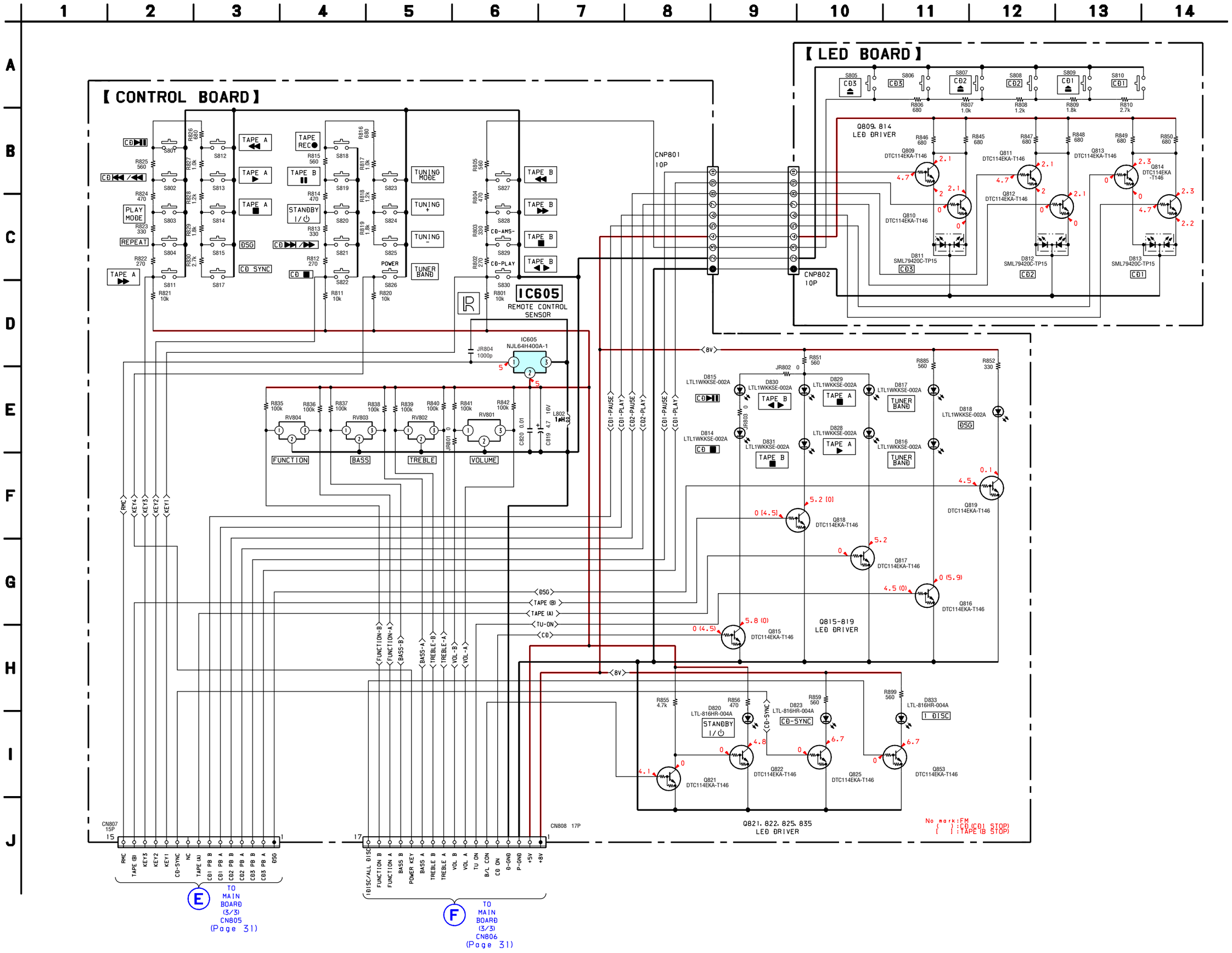

6-14. Printed Wiring Board – DRIVER Section –

• See page 23 for Circuit Boards Location.

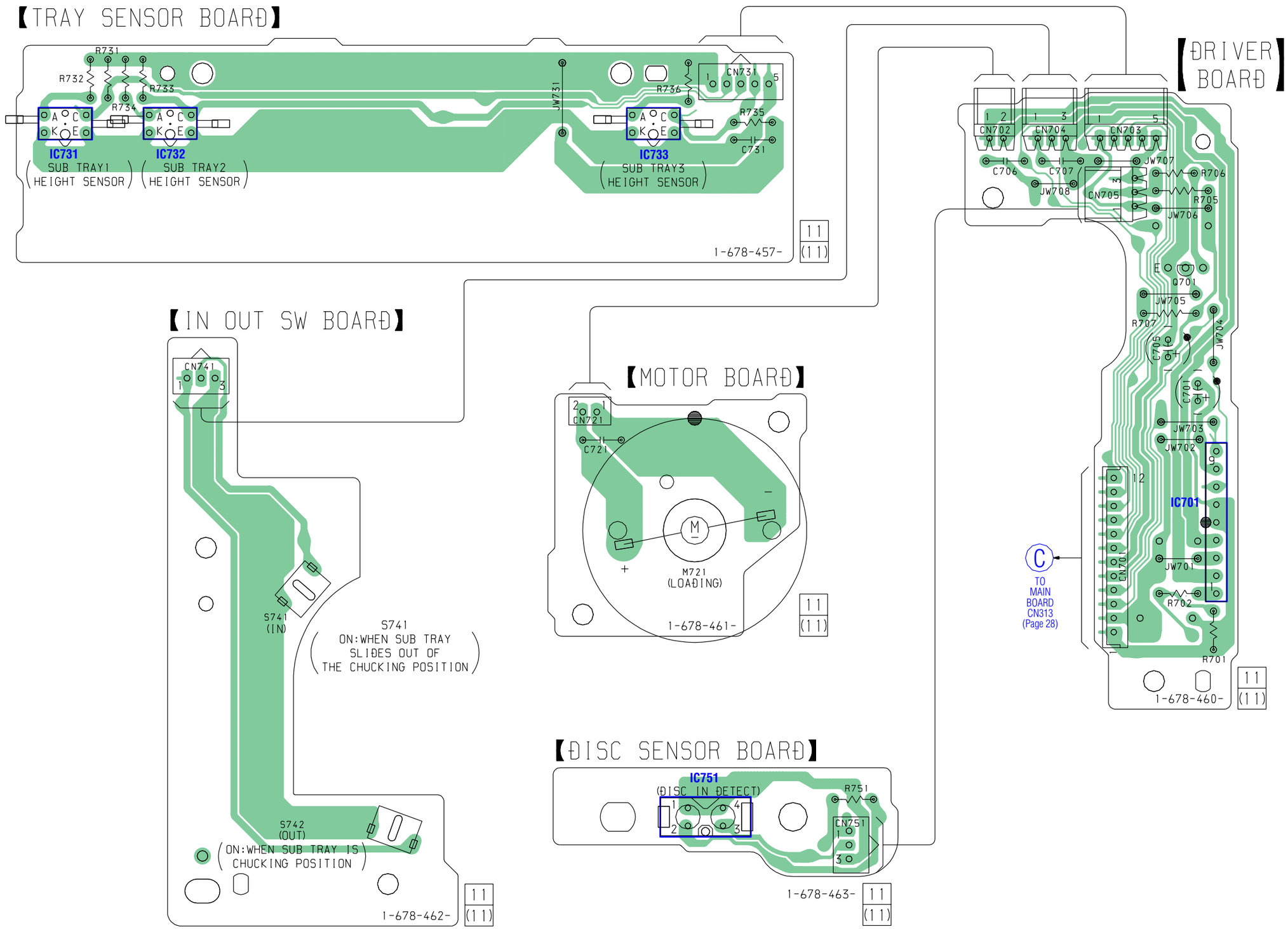

6-15. Schematic Diagram – DRIVER Section – • See page 41 for IC Block Diagram.

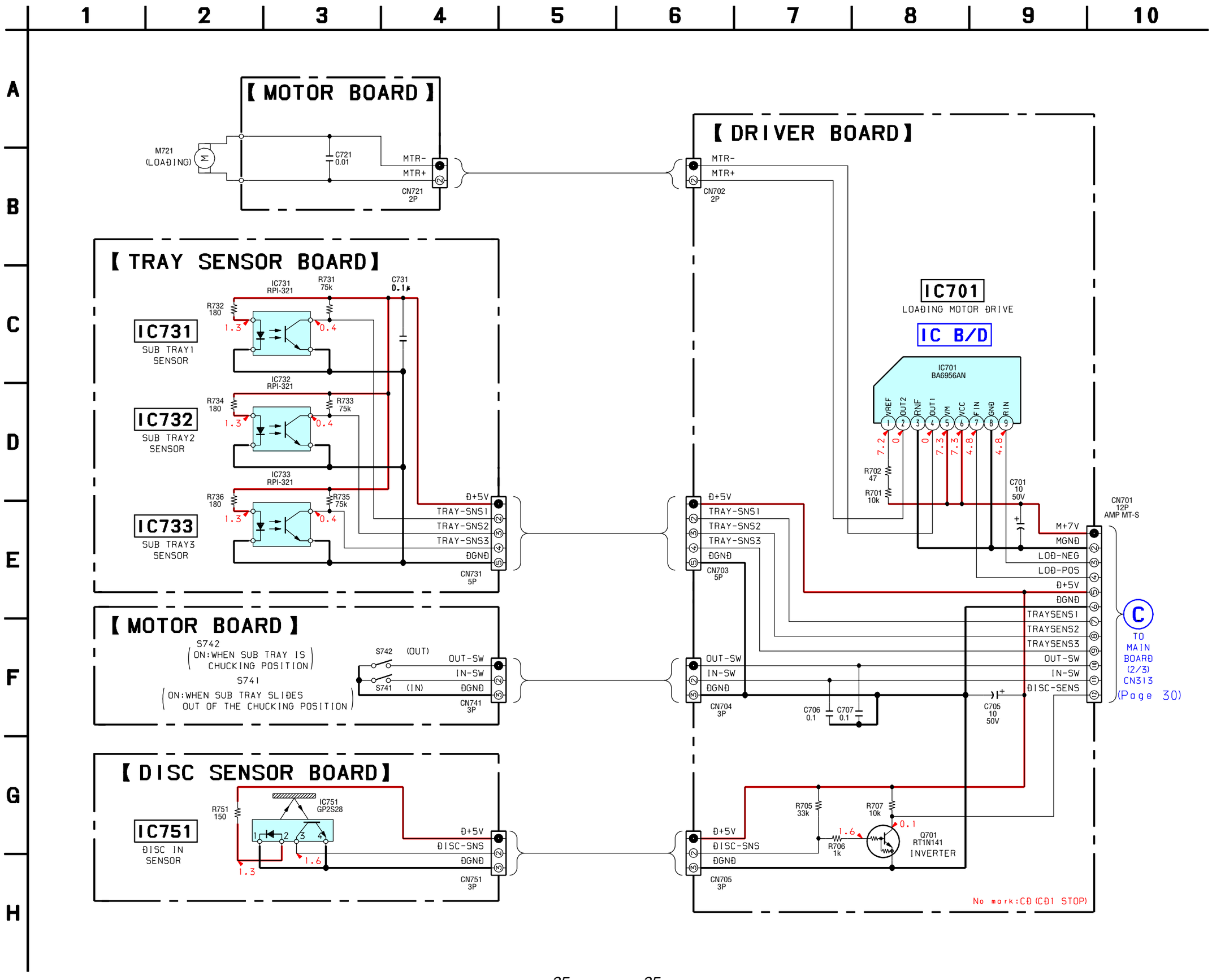

6-16. Printed Wiring Board – POWER Board –

• See page 23 for Circuit Boards Location.

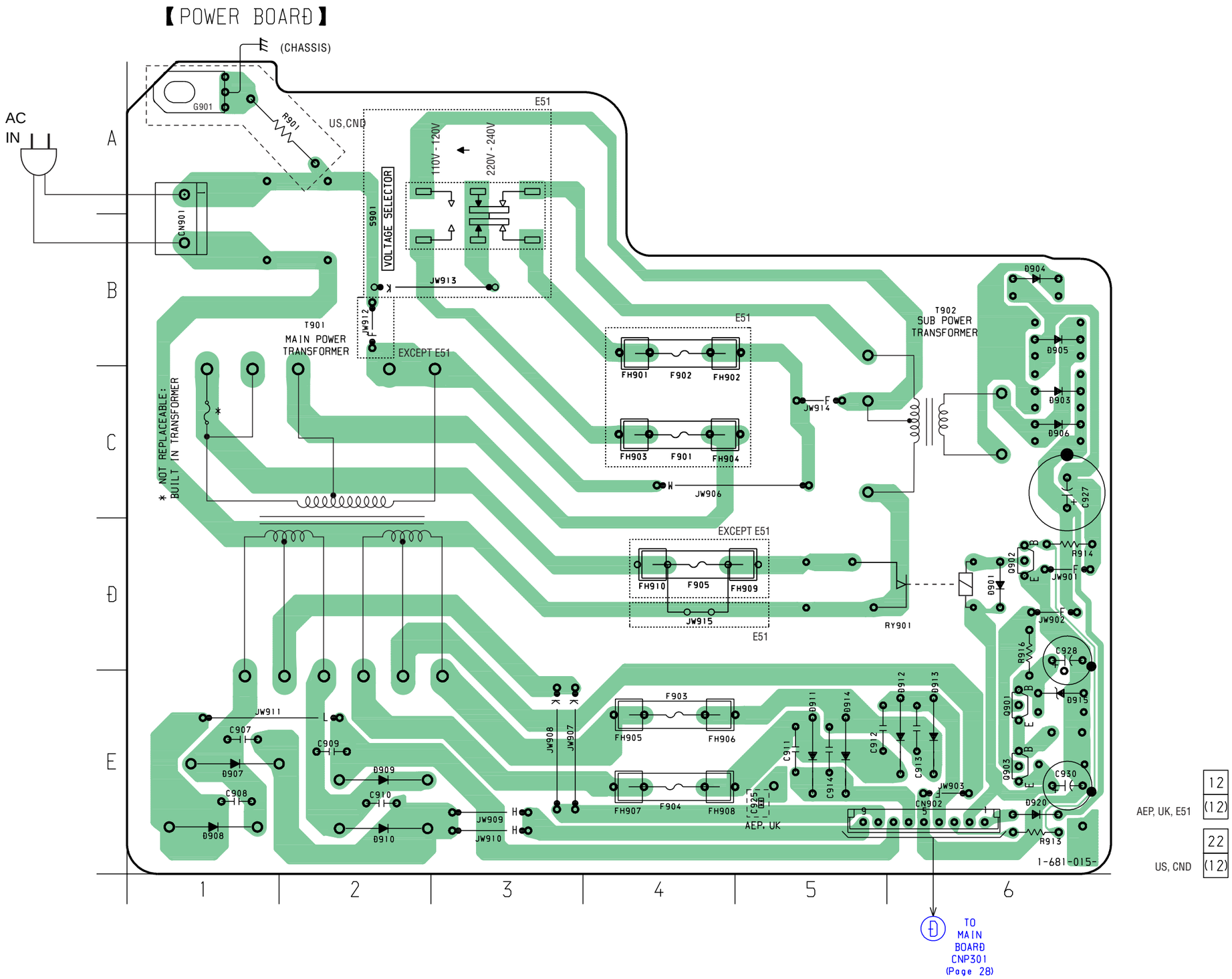

• **Semiconductor Location**

Ref. No.	Location
D901	D-6
D903	C-6
D904	B-6
D905	B-6
D906	C-6
D907	E-1
D908	E-1
D909	E-2
D910	E-2
D911	E-5
D912	E-6
D913	E-6
D914	E-5
D915	E-6
D920	E-6
Q901	E-6
Q902	D-6
Q903	E-6

6-17. Schematic Diagram – POWER Board –

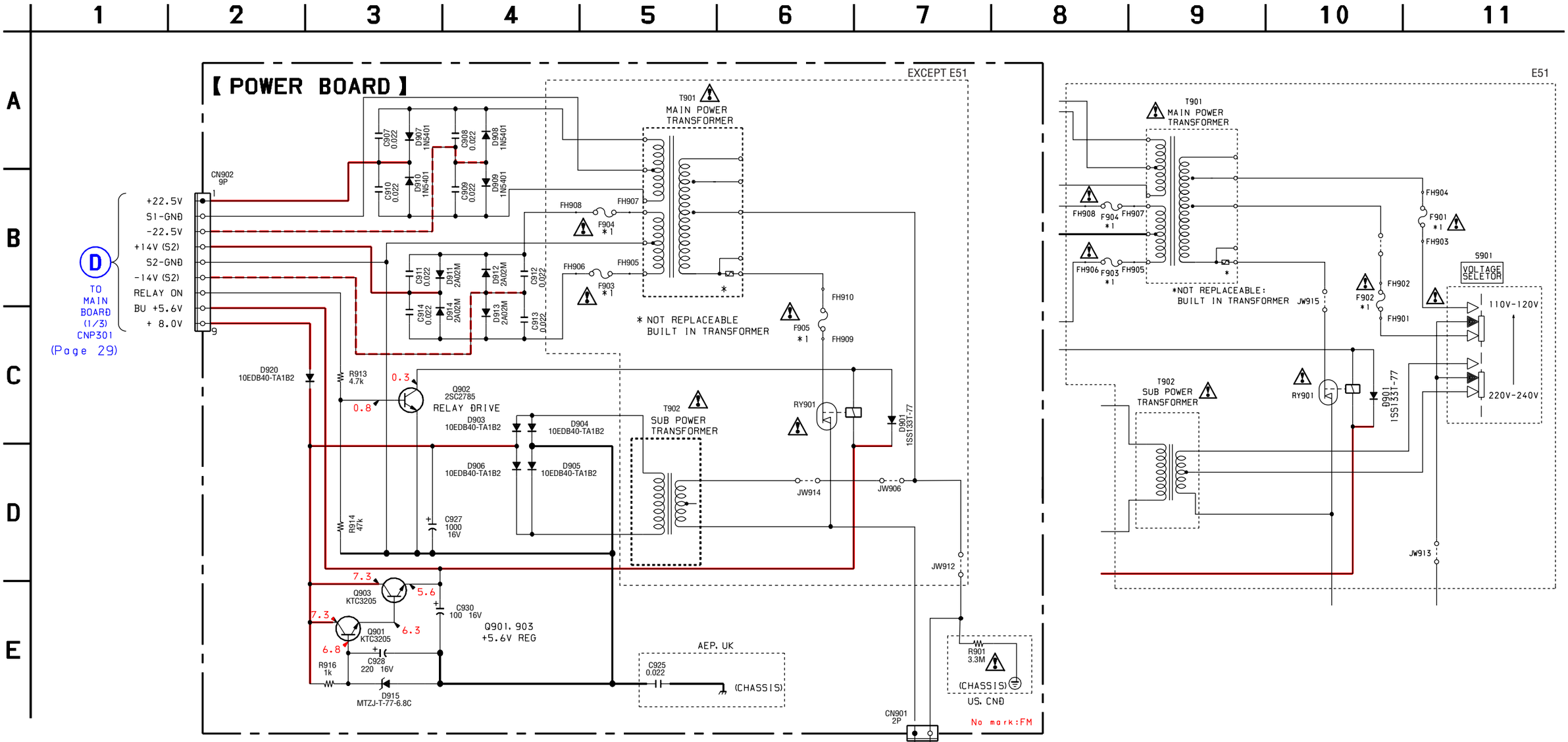

*1

	US, CND	AEP, UK	E51
F901	Not used	Not used	1.25A/250V
F902	Not used	Not used	3.15A/250V
F903, 904	3.15A/125V	2A/250V	2A/250V
F905	1.25A/125V	0.8A/250V	Not used

6-18. Printed Wiring Board – LCD Section –

• See page 23 for Circuit Boards Location.

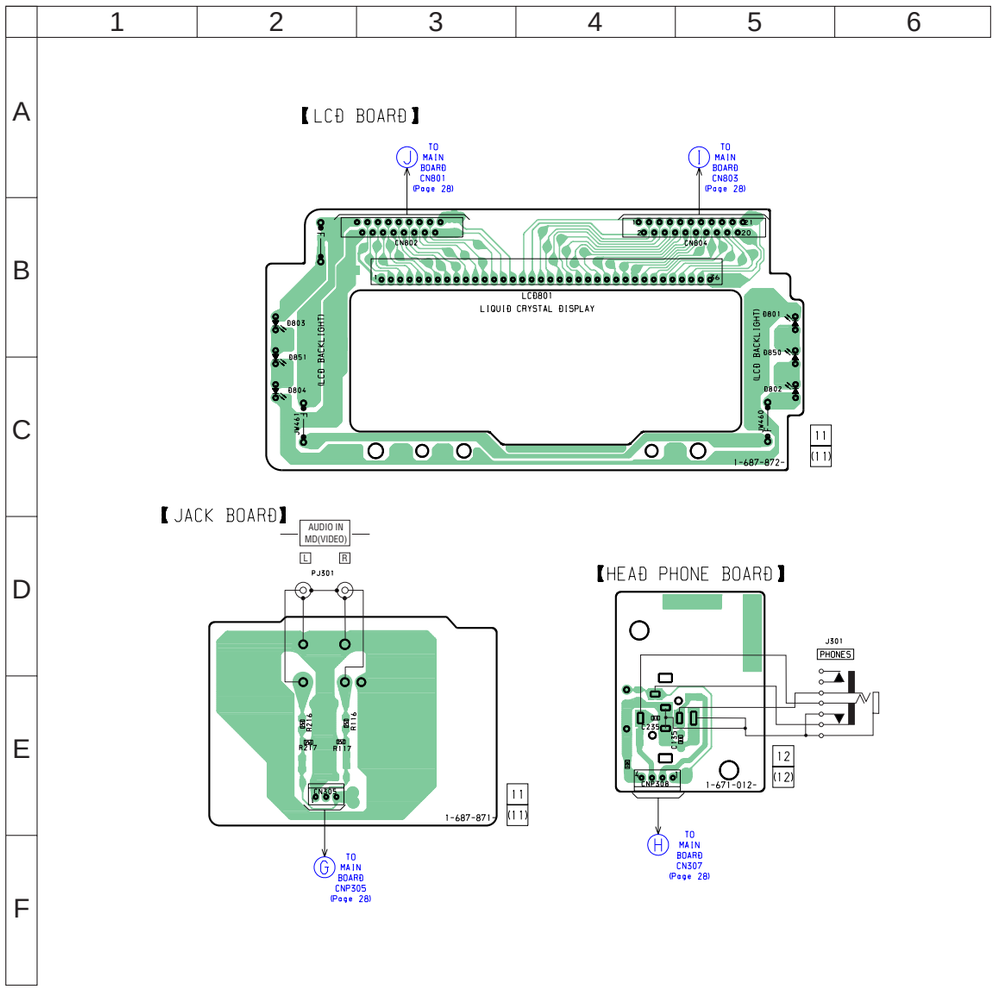

6-19. Schematic Diagram – LCD Section –

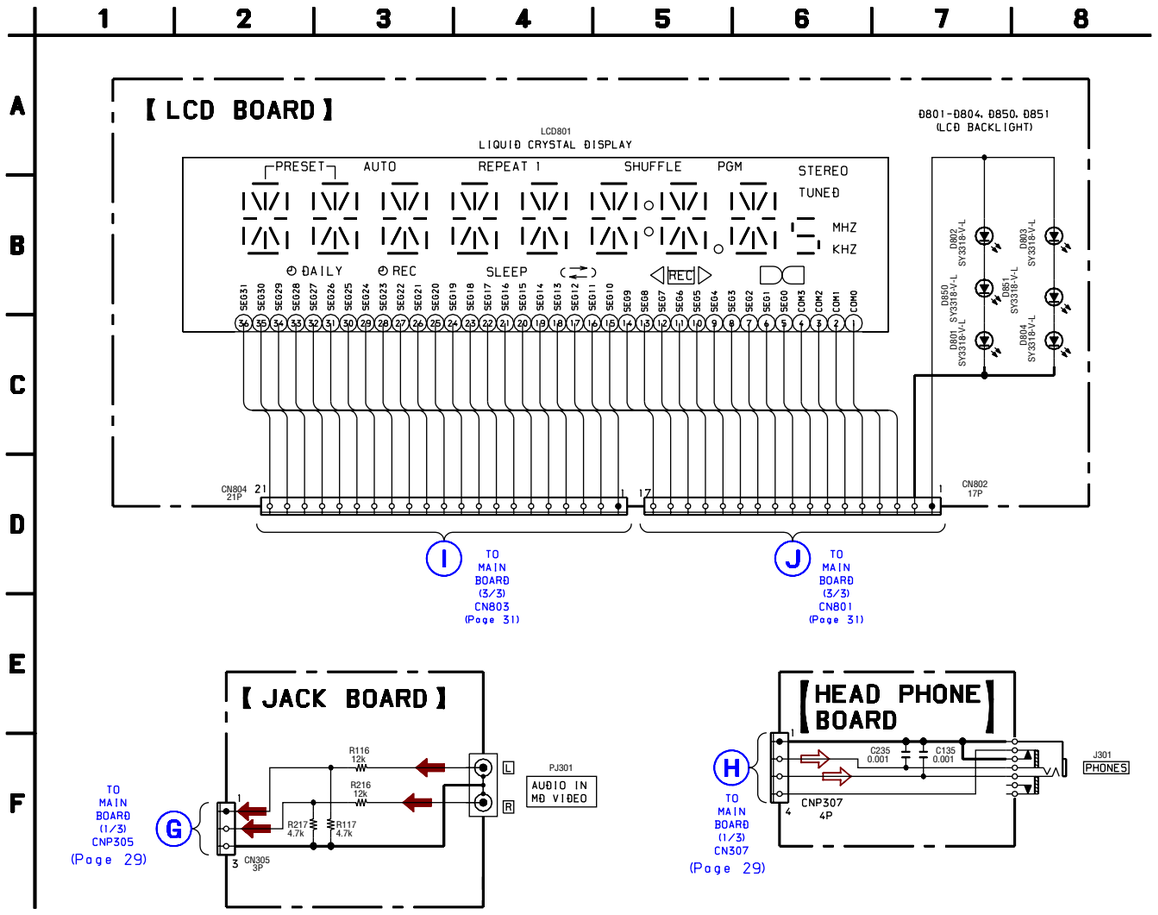

38

6-20. IC Pin Function Description

• IC601 M30622MGA-A43FP (SYSTEM CONTROLLER) (MAIN Board)

Pin No.	Pin Name	I/O	Description
1	C/D	O	LCD REQ Signal output.
2	C/S	O	LCD command select signal output.
3	AC CUT	I	AC CUT check signal. “L”:ON,”H”:OFF
4	REMOCON	I	Sircs remote control signal input.
5	SI (LCD)	I	LCD Serial interface signal input.
6	A-HALF	O	Tape A half signal output.
7	CLK (LCD)	O	LCD clock signal output.
8	BYTE	—	Ground terminal.
9	CNVSS	—	Ground terminal.
10	XCIN	I	Sub clock in.
11	XCOUT	O	Sub clock out.
12	RESET	O	System reset in signal output.
13	XOUT	O	Main system clock out.
14	VSS	—	Ground terminal.
15	XIN	I	System reset in signal input.
16	VCC	—	Power supply.
17	NC	—	Not used.
18	RDS CLK	I	RDS clock signal input.
19	SCOR	I	CD Q-data request signal input.
20	A-PLAY	I	Tapu A play signal input
21	B-PLAY	O	Tapu B play signal input
22	REC-PB	I	REC-PB/REC-MUTE signal input.
23	CAP +	O	CAP-MOTOR signal. “H”:REV,”L”:FED
24	PWM3	O	BU PWM3 signal outout.
25	A-TRG	O	Tape A trigger signal output.
26	PWM2	O	BU PWM2 signal outout.
27	B-TRG	O	Tape B trigger signal output.
28	PWM1	O	BU PWM1 signal output.
29	—	—	IIC SCL
30	—	—	IIC SDA
31	NC	—	Not used.
32	C-SQSO	I	CD SQ data inout.
33	C-SQCL	O	CD SQ clock output.
34	REC-MUTE/BAIS	O	REC MUTE/BAIS signal output, “H”:ON,”L”:OFF.
35	SENS	I	CD condition signal input.
36	PB A/B	O	Tape PB A/B select signal output.
37	LD ON	O	LD power “H”:ON,”L”:OFF.
38	CD ON	O	CD power “H”:ON,”L”:OFF.
39	CD CLK	O	CD clock signal output.
40	LINE MUTE	O	LINE muting ON/OFF signal output.
41	CD DATA	O	CD data signal output.
42	DISC-SNS	I	Detection input signal from DISC SENSOR BOARD.
43	IN SW	I	IN SW signal input.
44	OUT SW	I	OUT SW signal output.
45	TRAY-SENS3	I	CD table detect signal input.
46	TRAY-SENS2	I	CD table detect signal input.
47	TRAY-SENS1	I	CD table detect signal input.
48	LOD POS	O	Loading motor control signal output
49	LOD NEG	O	Loading motor control signal output
50	X-LATCH	O	CD LAT signal output.

Pin No.	Pin Name	I/O	Description
51	X-RST	O	CD reset signal output.
52	AMP-MUTE	O	AMS signal output. “L”:IN,”H”:OUT.
53	B/L CON	O	Back light LED control signal output.
54	AU-MUTE	O	Audio mute signal output. “H”:IN,”L”:OUT.
55	STBY ON	O	Standby relay ON/OFF signal output.
56	VOL CLK	O	VOL CLK signal output.
57	VOL DATA	O	VOL DATA signal output.
58	RDS DATA	I	RDS data signal input.
59	FM ON	O	FM power “H”:ON,”L”:OFF.
60	TUNED	I	TUNED detact signal input. “L”:IN,”H”:OUT.
61	TU DO	I	Tuner data signal input.
62	VCC	—	Power supply.
63	TU CK	O	Tuner clock signal output.
64	VSS	—	Ground terminal.
65	TU D1	O	Tuner data signal output.
66	TU CE	O	Tuner detect signal output.
67	CD LED	O	CD LED control signal output.
68	TU ON	O	Tuner LED signal output.
69	VOL A	I	Volume signal inout from rotary encoder.
70	VOL B	I	Volume signal inout from rotary encoder.
71	TREBLE A	I	Treble signal inout from rotary encoder.
72	TREBLE B	I	Treble signal inout from rotary encoder.
73	BASS A	I	Bass ignal inout from rotary encoder.
74	POWER KEY	I	Power ON/OFF signal input.
75	BASS B	I	Bass ignal inout from rotary encoder.
76	FUNCTION A	I	Function signal inout from rotary encoder.
77	FUNCTION B	I	Function signal inout from rotary encoder.
78	1DISC/ALL DISC	O	DISC LED signal output.
79	DSG	O	DSG LED control signal output.
80	CD1 PB-A	O	CD1 play LED signal output
81	CD1 PB-B	O	CD1 disc LED signal putput.
82	CD2 PB-A	O	CD2 play LED signal output
83	CD2 PB-B	O	CD2 disc LED signal putput.
84	CD3 PB-A	O	CD3play LED signal output
85	CD3 PB-B	O	CD3 disc LED signal putput.
86	TAPE(A)	O	Tape A function LED signal output
87	REC MUTE	O	REC MUTE ON/OFF signal output.
88	CD-SYNC	O	CD SYNC LED signal output.
89	KEY1	I	Key input signal from function key.
90	KEY2	I	Key input signal from function key.
91	KEY3	I	Key input signal from function key.
92	TAPE(B)	O	Tape B function LED signal output
93	B-SHUT	I	B deck reel pulse signal input.
94	A-SHUT	I	A deck reel pulse signal input.
95	SIMUKE	I	Version select input.
96	AVSS	—	Ground terminal.
97	B-HALF	I	B deck half detect signal input.
98	VRFF	O	Analog reference voltage.
99	AVCC	—	Analog power supply.
100	LVD RST	O	LCD reset signal output.

6-21. IC Block Diagrams

IC101, 201 TDA7296 (MAIN Board)

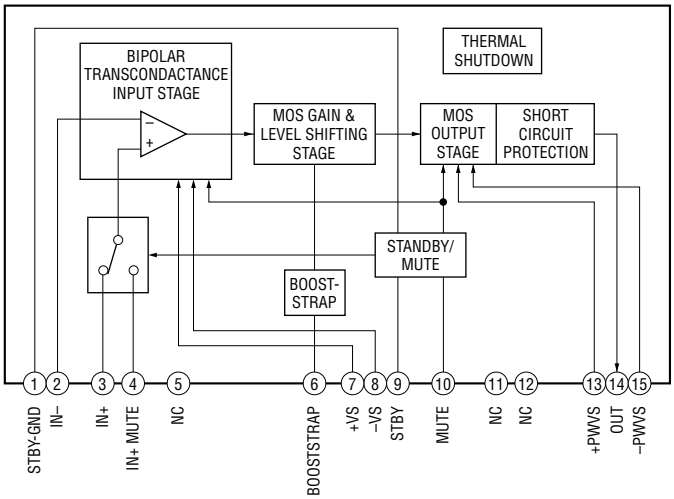

IC603 BU1924AF (MAIN Board)

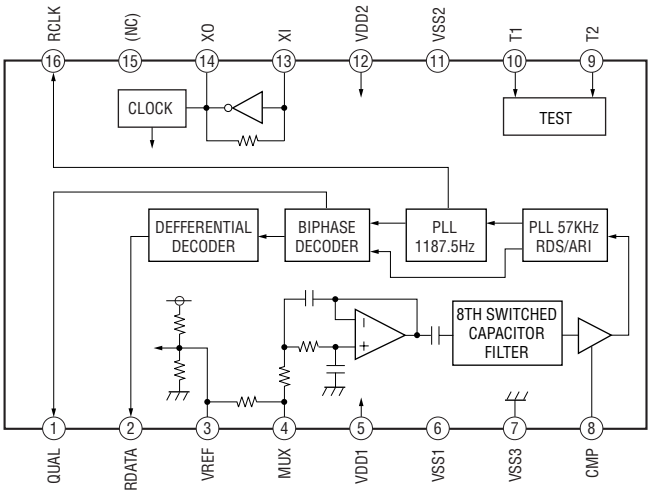

IC701 BA6956AN (DRIVER Board)

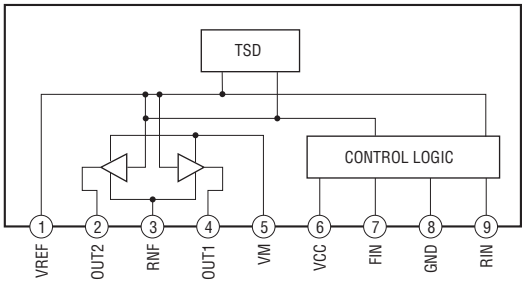

IC401 TA8189N (TC Board)

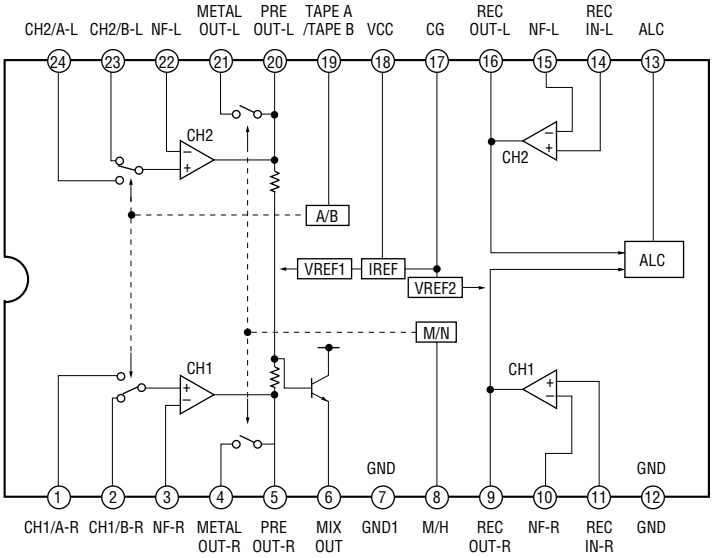

IC101 CXD3017Q (CD Board)

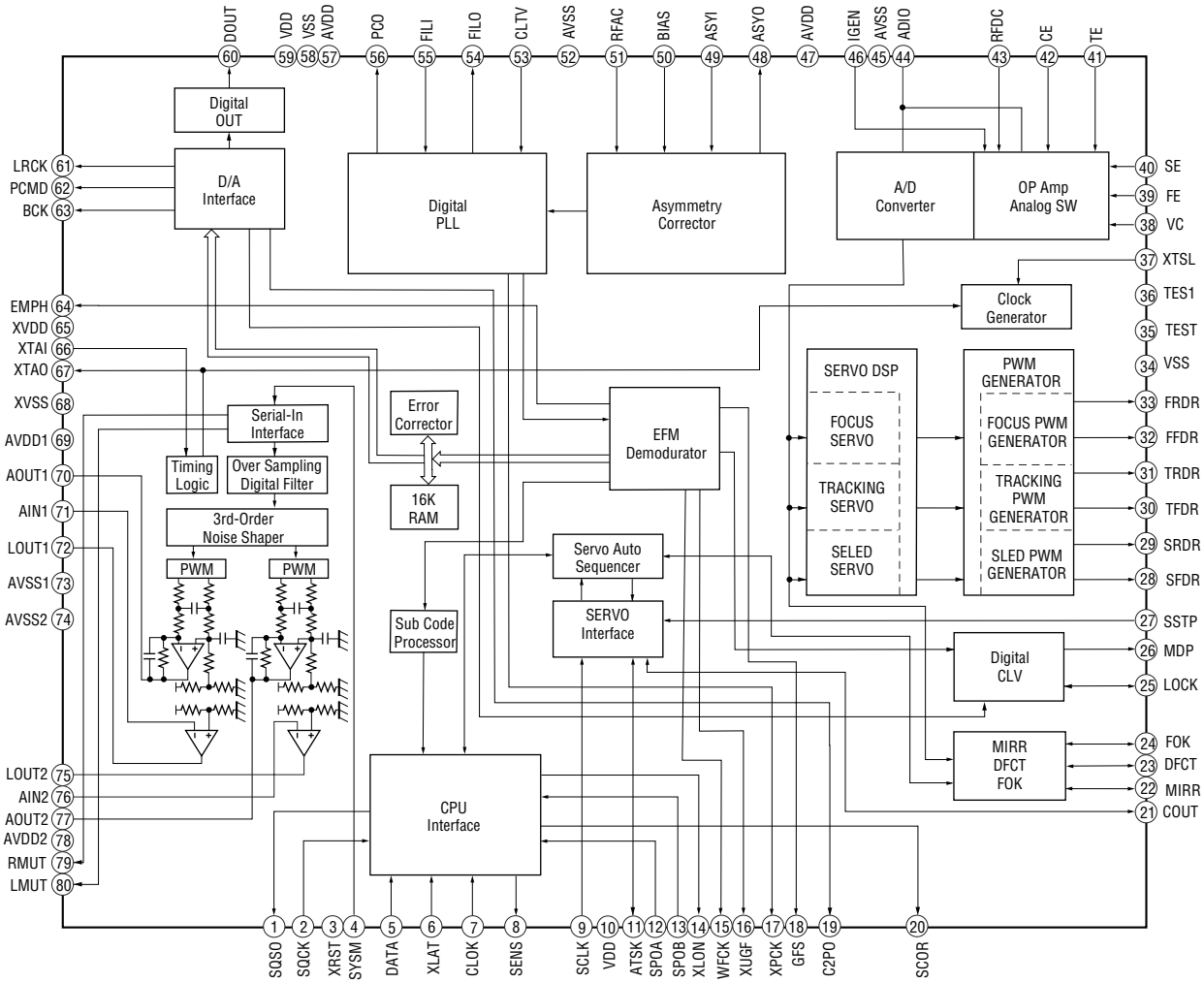

IC102 BA5974FP (CD Board)

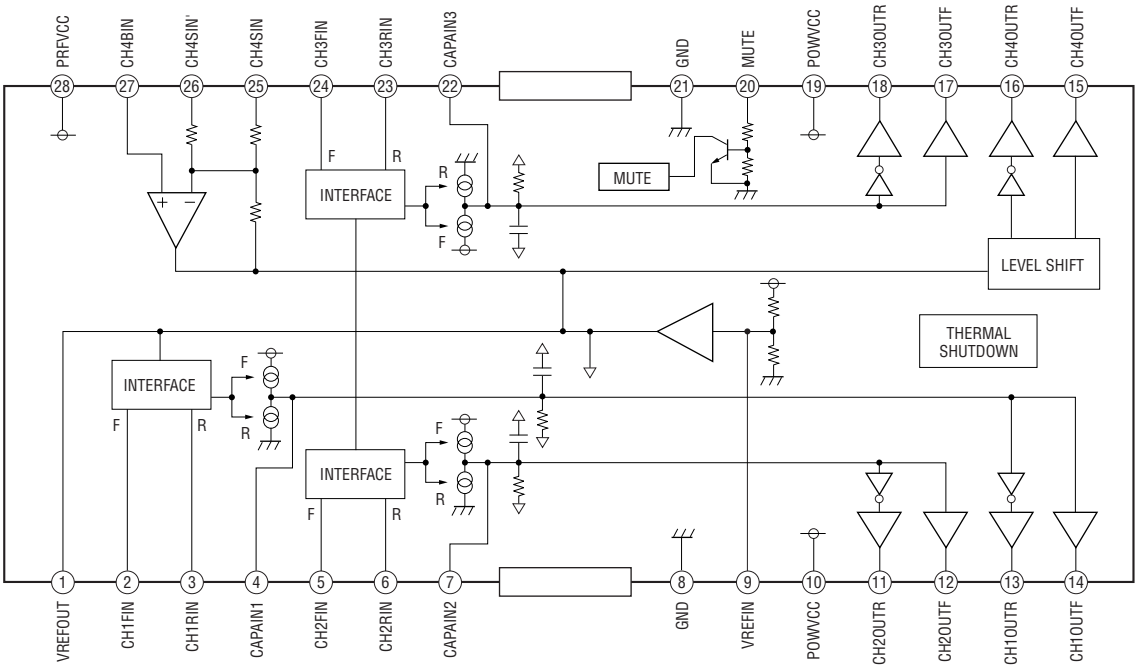

IC103 CXA2581N (CD Board)

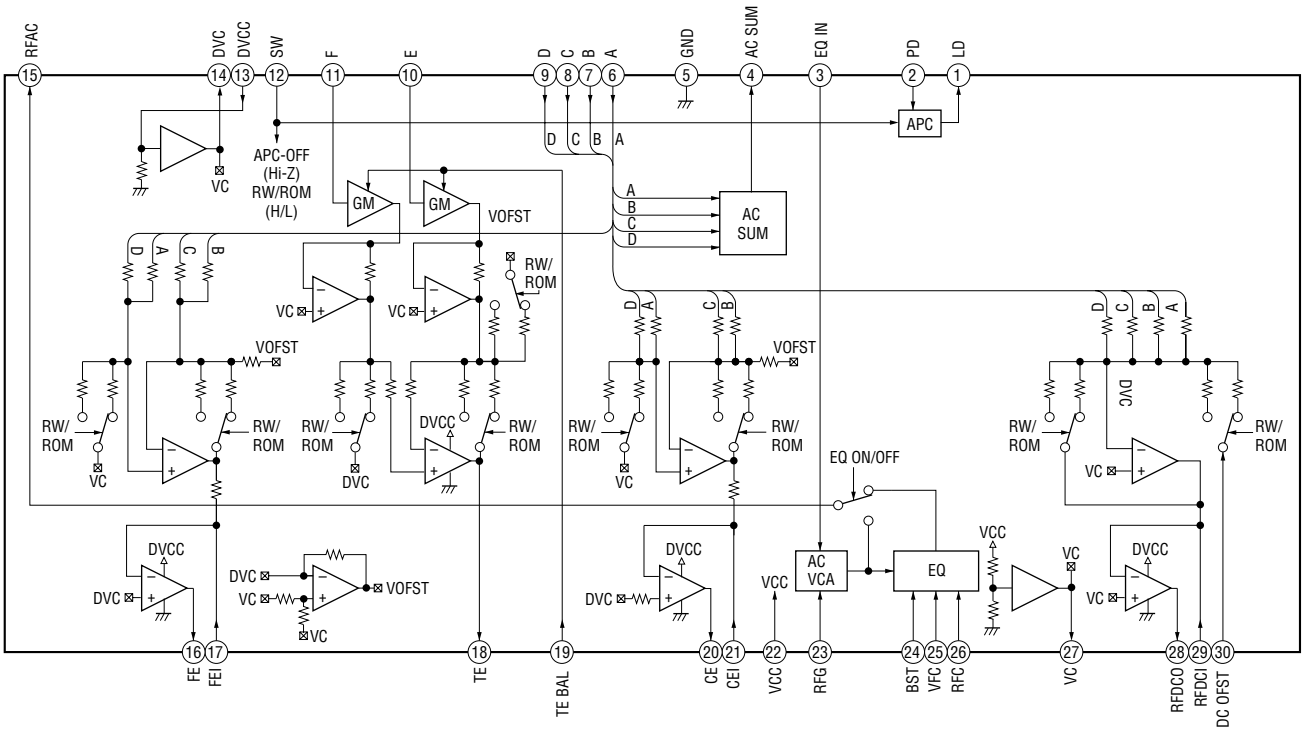

SECTION 7
EXPLODED VIEWS

NOTE:
- -XX, -X mean standardized parts, so they may have some differences from the original one.
- Items marked "*" are not stocked since they are seldom required for routine service. Some delay should be anticipated when ordering these items.
- The mechanical parts with no reference number in the exploded views are not supplied.
- Abbreviation
  CND : Canadian model
  E51 : Chilean and peruvian model

The components identified by mark ⚠ or dotted line with mark ⚠ are critical for safety. Replace only with part number specified.

Les composants identifiés par une marque ⚠ sont critiques pour la sécurité. Ne les remplacer que par une pièce portant le numéro spécifié.

7-1. Cover Section

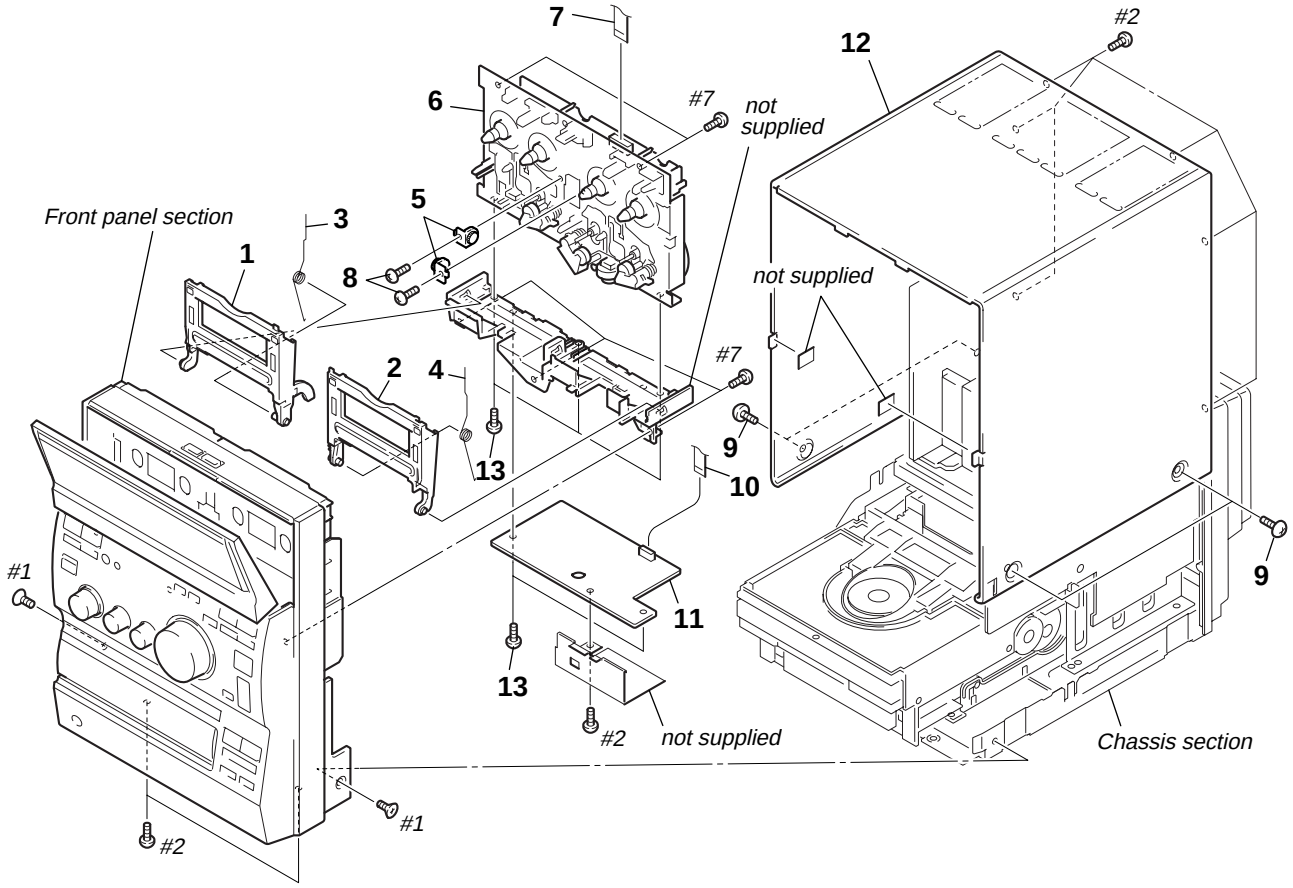

Ref. No.	Part No.	Description	Remarks	Ref. No.	Part No.	Description	Remarks
1	X-4952-972-1	HOLDER (A) SUB ASSY, CASSETTE		9	4-221-580-01	SCREW, CASE	
2	X-4952-973-1	HOLDER (B) SUB ASSY, CASSETTE		10	1-757-705-11	CABLE, FLEXIBLE FLAT (11 CORE)	
3	4-229-008-01	SPRING (CASSETTE A)		11	A-2007-972-A	TC BOARD, COMPLETE	
4	4-229-009-01	SPRING (CASSETTE B)		12	4-222-370-21	COVER (UPPER)	
5	4-229-013-11	DAMPER		13	4-229-428-01	SCREW, +BVTP TAPPING	
6	1-796-078-11	DECK, MECH		#1	7-685-245-19	SCREW +KTP 3X6 TYPE2 NON-SLIT	
7	1-757-707-11	CABLE, FLEXIBLE FLAT (11 CORE)		#2	7-685-546-14	SCREW +BTP 3X8 TYPE2 N-S	
8	4-229-015-01	SCREW, +BVTTWH TAPPING		#7	7-685-646-79	SCREW +BVTP 3X8 TYPE2 N-S	

7-2. Front Panel Section

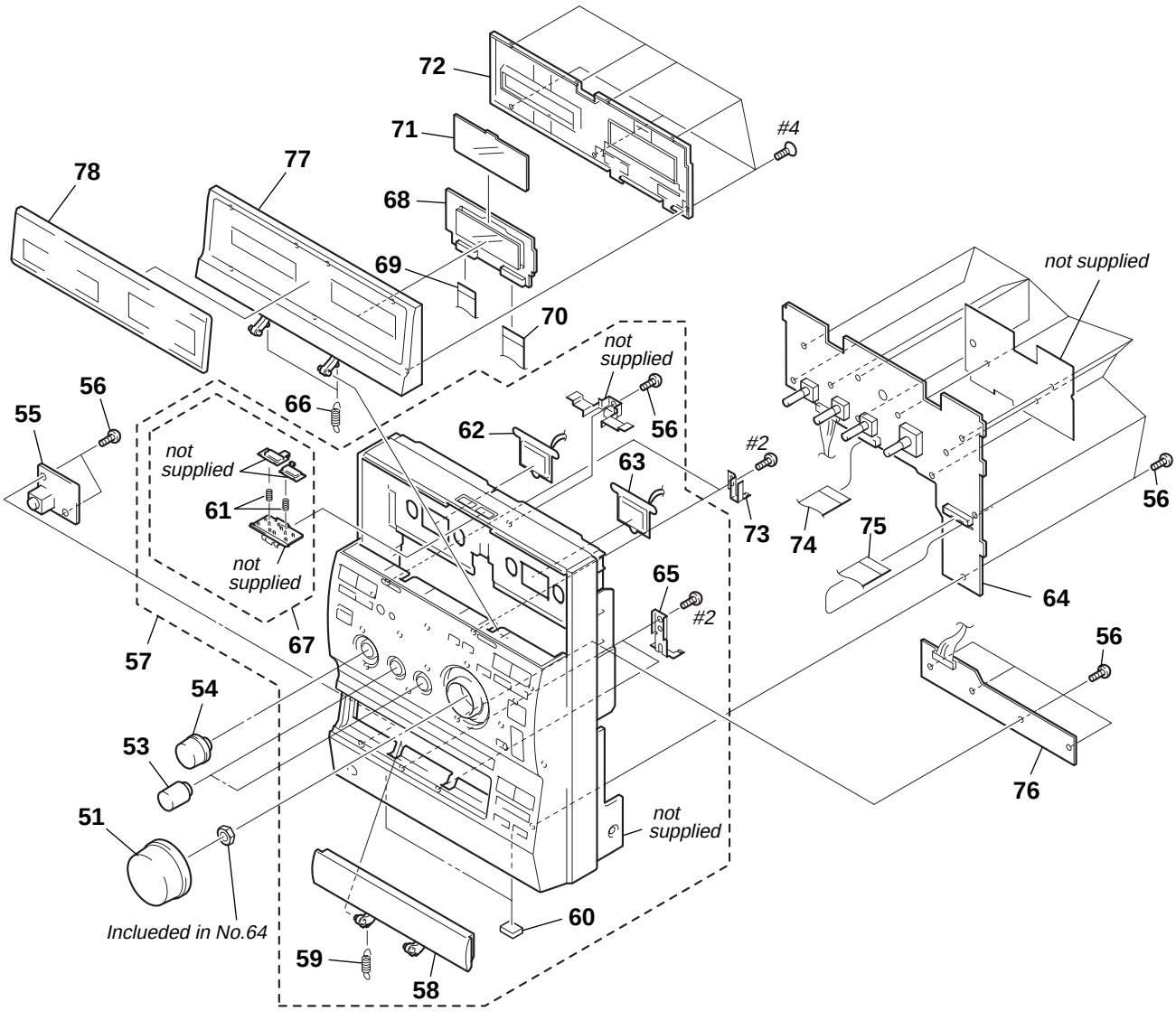

Ref. No.	Part No.	Description	Remarks
51	4-232-441-01	KNOB (VOL)	
52	4-226-047-01	NUT, HEXAGON	
53	4-232-440-01	KNOB (BASS)	
54	4-232-439-01	KNOB (SELECT)	
55	1-681-012-12	HEAD PHONE BOARD	
56	4-931-757-31	SCREW(DIA.2.6X8)(IT3B),TAPPING	
57	X-4955-458-1	PANEL SUB ASSY, FRONT (AEP,UK)	
57	X-4955-582-1	PANEL SUB ASSY, FRONT (US,CND)	
57	X-4955-703-1	PANEL SUB ASSY, FRONT (E51)	
58	4-233-472-11	CD LID	
59	4-233-491-01	SPRING (CD LID)	
60	4-232-478-01	FOOT	
61	4-233-494-01	SPRING (EJECT)	
62	1-418-692-32	INDICATOR BLOCK, LED	
63	1-418-693-32	INDICATOR BLOCK, LED	
64	A-4732-477-A	CONTROL BOARD, COMPLETE	

Ref. No.	Part No.	Description	Remarks
65	4-233-478-01	BRACKET (CD LID)	
66	4-233-490-01	SPRING (LID)	
67	X-4955-462-1	BUTTON SUB ASSY, EJECT	
68	1-687-872-11	LCD BOARD	
69	1-757-702-11	CABLE, FLEXIBLE FLAT (17 CORE)	
70	1-757-703-11	CABLE, FLEXIBLE FLAT (21 CORE)	
71	4-217-319-11	PLATE, LCD LIGHT	
72	4-233-475-01	BRACKET (LCD)	
73	4-222-394-01	BRACKET (CASSETTE LID A)	
74	1-757-704-11	CABLE, FLEXIBLE FLAT (15 CORE)	
75	1-757-706-11	CABLE, FLEXIBLE FLAT (17 CORE)	
76	1-681-016-12	LED BOARD	
77	4-233-471-11	LID, CASSETTE	
78	4-233-493-11	WINDOW (CASSETTE)	
#2	7-685-546-14	SCREW +BTP 3X8 TYPE2 N-S	
#4	7-685-246-14	SCREW +KTP 3X8 TYPE2 NON-SLIT	

7-3. Chassis Section

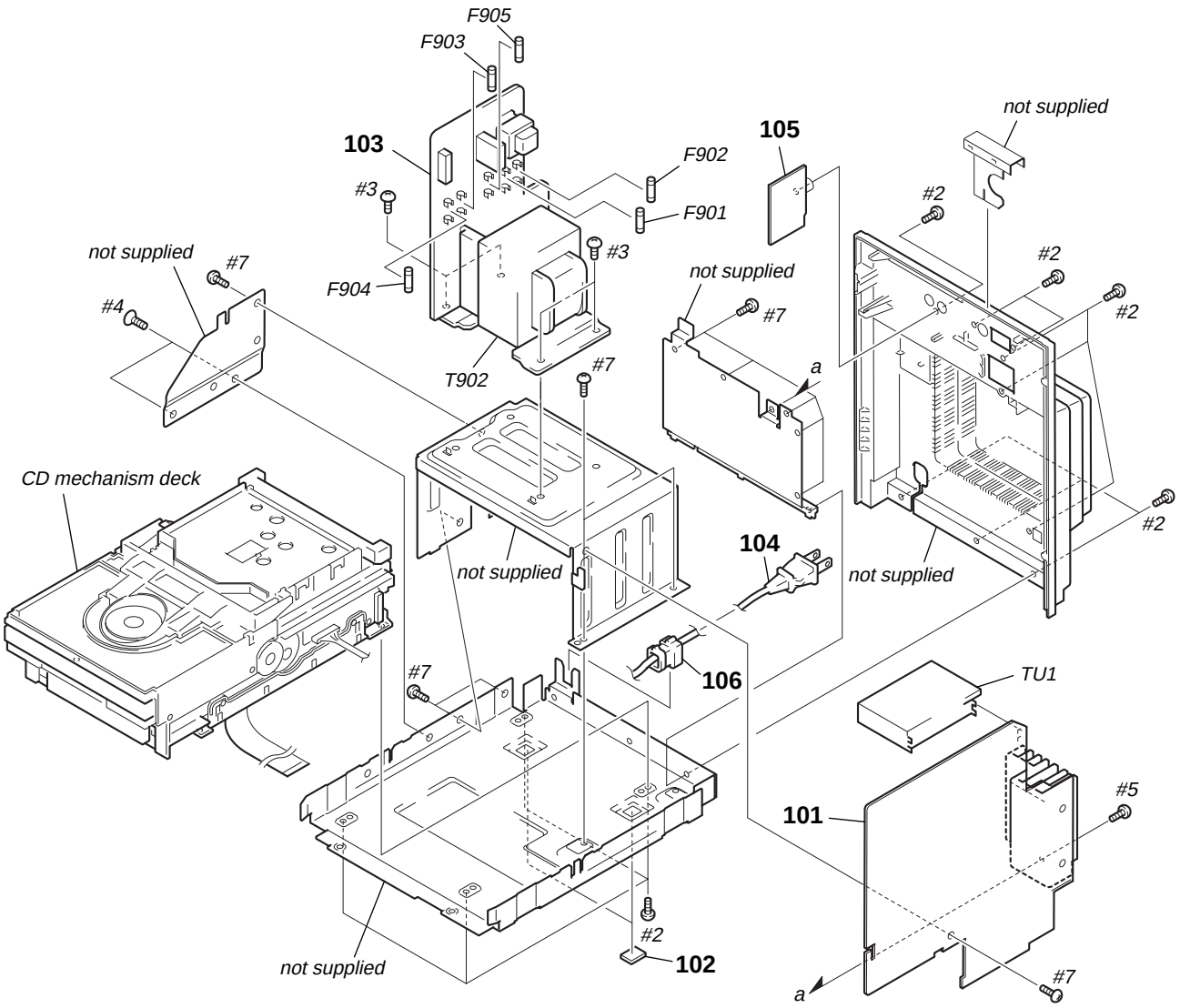

Ref. No.	Part No.	Description	Remarks
101	A-4732-474-A	MAIN BOARD, COMPLETE (AEP,UK)	
101	A-4733-359-A	MAIN BOARD, COMPLETE (US,CND)	
101	A-4734-564-A	MAIN BOARD, COMPLETE (E51)	
102	4-232-478-01	FOOT	
103	1-681-015-12	POWER BOARD (AEP,UK,E51)	
103	1-681-015-22	POWER BOARD (US,CND)	
⚠104	1-696-169-51	CORD, POWER (AEP,UK,E51)	
⚠104	1-783-531-72	CORD, POWER (US,CND)	
105	1-687-871-11	JACK BOARD	
106	4-217-350-11	STOPPER, CORD	
⚠F901	1-533-466-11	FUSE, GLASS TUBE (T1.25AL/250V) (E51)	
⚠F902	1-533-464-11	FUSE, GLASS TUBE (T800mAL/250V) (E51)	
⚠F903	1-533-468-11	FUSE, GLASS TUBE (DIA.5) (T2AL/250V)	(AEP,UK,E51)
⚠F903	1-576-375-11	FUSE, GLASS TUBE (3.15A/125V) (US,CND)	
⚠F904	1-533-468-11	FUSE, GLASS TUBE (DIA.5) (T2AL/250V)	(AEP,UK,E51)

Ref. No.	Part No.	Description	Remarks
⚠F904	1-576-375-11	FUSE, GLASS TUBE (3.15A/125V) (US,CND)	
⚠F905	1-533-464-11	FUSE, GLASS TUBE (DIA.5) (T800mAL/250V)	(AEP,UK)
⚠F905	1-576-374-11	FUSE, GLASS TUBE (1.25A/125V) (US,CND)	
⚠T901	1-437-248-21	TRANSFORMER, POWER (MAIN) (AEP,UK)	
⚠T901	1-437-249-11	TRANSFORMER, POWER (MAIN) (US,CND)	
⚠T901	1-437-250-31	TRANSFORMER, POWER (E51)	
TU1	A-4476-414-A	TUNER UNIT (AEP,UK)	
TU1	A-4476-415-A	TUNER UNIT (US,CND,E51)	
#2	7-685-546-14	SCREW +BTP 3X8 TYPE2 N-S	
#3	7-685-659-14	SCREW +BVTP 4X8 TYPE2 N-S	
#4	7-685-246-14	SCREW +KTP 3X8 TYPE2 NON-SLIT	
#5	7-685-648-79	SCREW +BVTP 3X12 TYPE2 N-S	
#7	7-685-646-79	SCREW +BVTP 3X8 TYPE2 N-S	

The components identified by mark ⚠ or dotted line with mark ⚠ are critical for safety. Replace only with part number specified.	Les composants identifiés par une marque ⚠ sont critiques pour la sécurité. Ne les remplacer que par une pièce portant le numéro spécifié.

7-4. CD Mechanism Deck-1

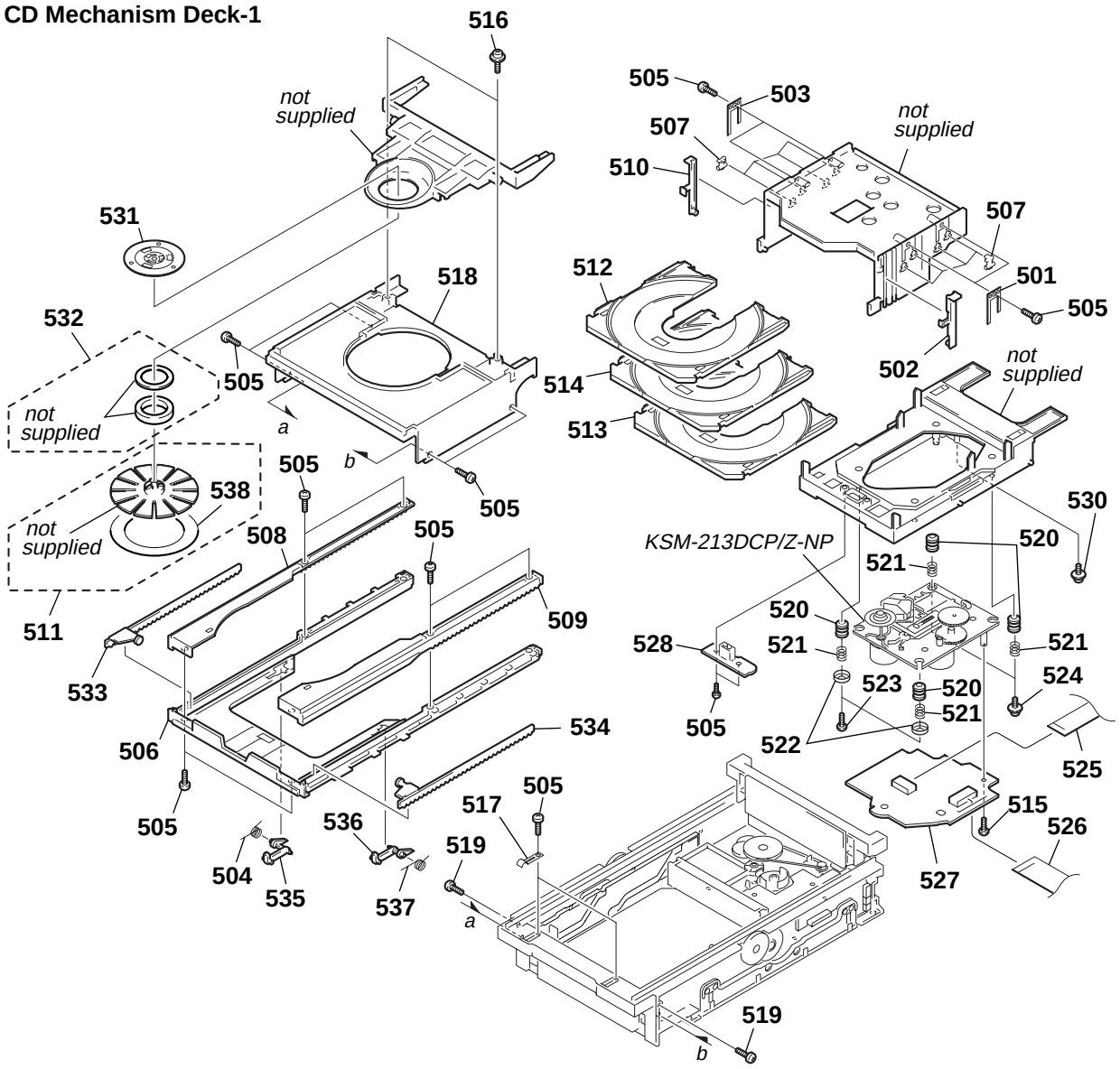

Ref. No.	Part No.	Description	Remarks
501	4-228-980-01	SPRING (STOCKER), LEAF	
502	4-228-964-01	SLIDER (STOCKER.R)	
503	4-234-423-01	SPRING (STOCKER L), LEAF	
504	4-228-995-01	SPRING (L), TORSION	
505	4-218-253-31	SCREW (M2.6), +BTTP	
506	4-228-972-02	TRAY (MAIN)	
507	4-228-981-02	STOPPER (TRAY)	
508	4-228-975-02	COVER (TRAY.L)	
509	4-228-978-02	COVER (TRAY.R)	
510	4-228-963-01	SLIDER (STOCKER.L)	
511	X-4953-282-1	PULLEY (A) ASSY, CHUCKING	
512	4-228-970-22	TRAY (SUB)	
513	4-228-970-12	TRAY (SUB)	
514	4-228-970-02	TRAY (SUB)	
515	7-685-533-19	SCREW +BTP 2.6X6 TYPE2 N-S	
516	4-218-254-21	SCREW (M2.6), +PTPWH	
517	4-228-969-02	SPRING (TABLE), LEAF	
518	4-228-974-02	RACK (CENTER)	
519	4-218-253-71	SCREW (M2.6), +BTTP	

Ref. No.	Part No.	Description	Remarks
520	4-227-549-11	INSULATOR	
521	4-227-045-11	SPRING (INSULATOR), COIL	
522	4-231-151-01	STOPPER (BU)	
523	4-931-757-31	SCREW(DIA.2.6X8)(IT3B),TAPPING	
524	4-985-672-01	SCREW (+PTPWHM2.6), FLOATING	
525	1-757-055-11	WIRE, PARALLEL (FFC) (16 CORE)	
526	1-757-708-11	CABLE, FLEXIBLE FLAT (21 CORE)	
527	A-4725-595-A	CD BOARD, COMPLETE	
528	1-678-463-11	DISK SENSOR BOARD	
530	4-227-899-01	SCREW (DIA. 12), FROATING	
531	4-231-102-01	PULLEY (213B), CHUCKING	
532	1-471-035-11	MAGNET ASSY	
533	4-228-986-02	RACK (TRAY.L)	
534	4-228-987-02	RACK (TRAY.R)	
535	4-228-990-03	LEVER (SUB.L)	
536	4-228-991-03	LEVER (SUB.R)	
537	4-228-996-01	SPRING (R), TORSION	
538	4-231-777-02	SHEET (KH2)	

7-5. CD Mechanism Deck-2

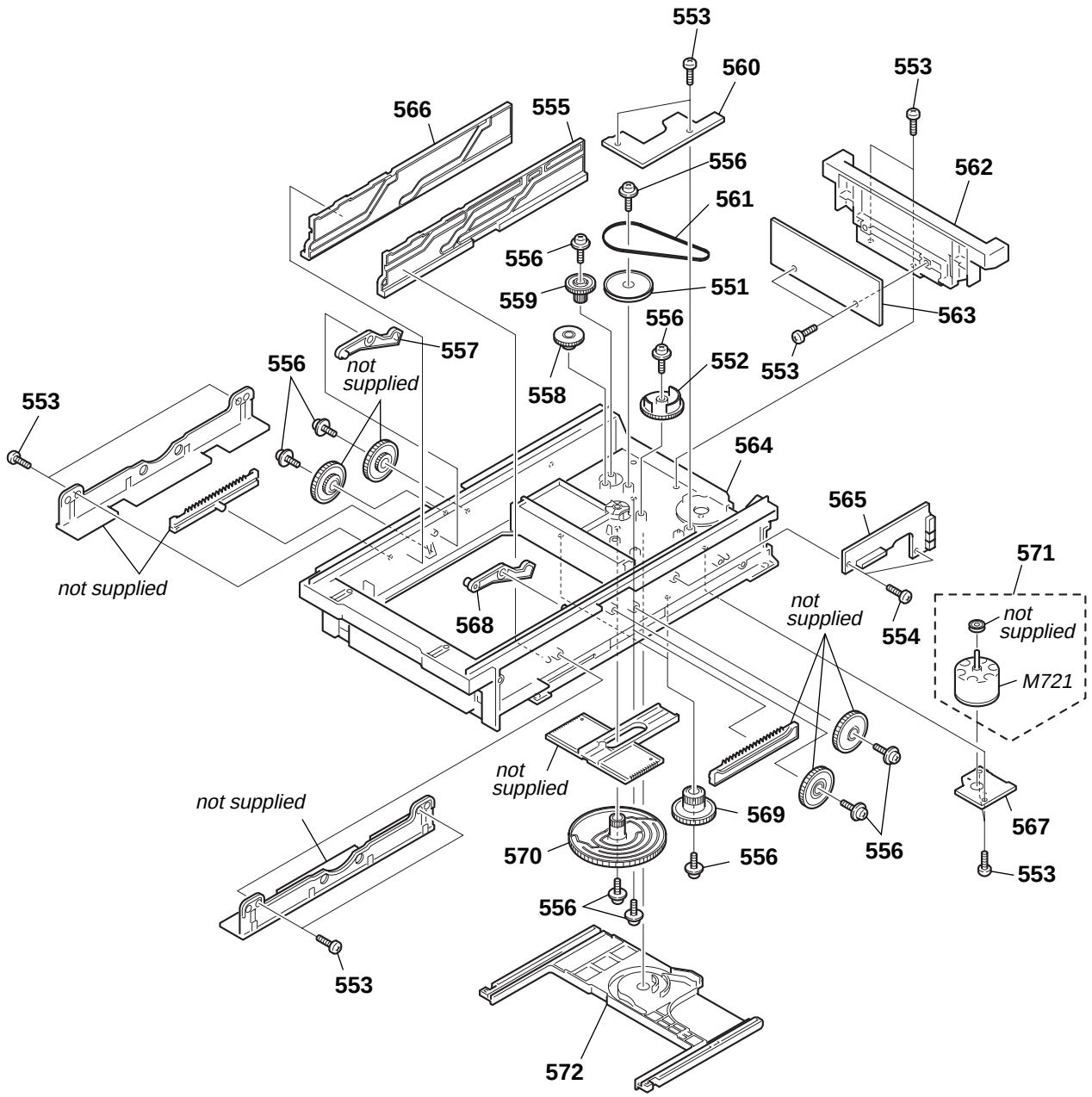

Ref. No.	Part No.	Description	Remarks
551	4-229-003-01	PULLEY	
552	4-228-998-01	GEAR (DETECTION)	
553	4-218-253-31	SCREW (M2.6), +BTTP	
554	4-218-253-41	SCREW (M2.6), +BTTP	
555	4-228-977-01	SLIDER (BU.L)	
556	4-218-254-21	SCREW (M2.6), +PTPWH	
557	4-228-999-02	LEVER (MAIN.L)	
558	4-228-985-01	GEAR (PULLEY)	
559	4-228-997-02	GEAR (CAM)	
560	1-678-462-11	IN OUT SW BOARD	
561	4-228-968-02	BELT	
562	4-229-001-01	HOLDER (SENSOR)	

Ref. No.	Part No.	Description	Remarks
563	1-678-457-11	TRAY SENSOR BOARD	
564	4-228-988-01	CHASSIS	
565	1-678-460-11	DRIVER BOARD	
566	4-228-976-01	SLIDER (BU.R)	
567	1-678-461-11	MOTOR BOARD	
568	4-229-000-02	LEVER (MAIN.R)	
569	4-229-002-02	GEAR (SLIDER)	
570	4-228-971-01	CAM	
571	A-4722-173-A	MOTOR ASSY	
572	4-228-993-03	SLIDER (LOADING)	
M721	1-541-632-12	MOTOR, DC (ELEVATOR)	

7-6. KSM-213D

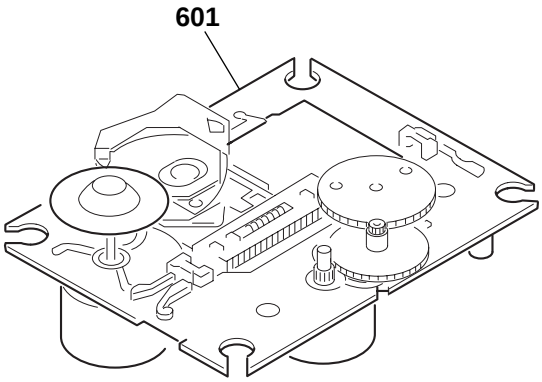

Ref. No.	Part No.	Description	Remarks
⚠601	A-4735-357-A	BASE ASSY, OP (KSM-213D)	

The components identified by mark ⚠ or dotted line with mark ⚠ are critical for safety. Replace only with part number specified.	Les composants identifiés par une marque ⚠ sont critiques pour la sécurité. Ne les remplacer que par une pièce portant le numéro spécifié.

CD

SECTION 8
ELECTRICAL PARTS LIST

NOTE:
- Due to standardization, replacements in the parts list may be different from the parts specified in the diagrams or the components used on the set.
- -XX, -X mean standardized parts, so they may have some difference from the original one.
- Items marked "*" are not stocked since they are seldom required for routine service. Some delay should be anticipated when ordering these items.
- CAPACITORS:
  uF: µF
- RESISTORS
  All resistors are in ohms.
  METAL: metal-film resistor
  METAL OXIDE: Metal Oxide-film resistor
  F: nonflammable
- COILS
  uH: µH
- SEMICONDUCTORS
  In each case, u: µ, for example:
  uA...: µA... , uPA... , µPA... ,
  uPB... , µPB... , uPC... , µPC... ,
  uPD..., µPD...
- Abbreviation
  CND : Canadian model
  E51 : Chilean and peruvian model

When indicating parts by reference number, please include the board name.

The components identified by mark ⚠ or dotted line with mark ⚠ are critical for safety. Replace only with part number specified.

Les composants identifiés par une marque ⚠ sont critiques pour la sécurité. Ne les remplacer que par une pièce portant le numéro spécifié.

Ref. No.	Part No.	Description			Remarks
	A-4725-595-A	CD BOARD, COMPLETE			
		**********			
		< CAPACITOR >			
C101	1-162-967-11	CERAMIC CHIP	0.0033uF	10%	50V
C102	1-107-826-11	CERAMIC CHIP	0.1uF	10.00%	16V
C103	1-162-962-11	CERAMIC CHIP	470PF	10%	50V
C104	1-162-962-11	CERAMIC CHIP	470PF	10%	50V
C108	1-107-826-11	CERAMIC CHIP	0.1uF	10.00%	16V
C109	1-162-965-11	CERAMIC CHIP	0.0015uF	10%	50V
C110	1-162-967-11	CERAMIC CHIP	0.0033uF	10%	50V
C111	1-162-927-11	CERAMIC CHIP	100PF	5%	50V
C112	1-115-156-11	CERAMIC CHIP	1uF		10V
C114	1-164-360-11	CERAMIC CHIP	0.1uF		16V
C116	1-126-382-11	ELECT	100uF	20.00%	16V
C117	1-126-382-11	ELECT	100uF	20.00%	16V
C118	1-162-964-11	CERAMIC CHIP	0.001uF	10%	50V
C121	1-164-360-11	CERAMIC CHIP	0.1uF		16V
C122	1-104-665-11	ELECT	100uF	20.00%	16V
C123	1-162-970-11	CERAMIC CHIP	0.01uF	10%	25V
C124	1-125-891-11	CERAMIC CHIP	0.47uF	10.00%	10V
C125	1-164-360-11	CERAMIC CHIP	0.1uF		16V
C126	1-164-360-11	CERAMIC CHIP	0.1uF		16V
C127	1-126-382-11	ELECT	100uF	20.00%	16V
C130	1-164-360-11	CERAMIC CHIP	0.1uF		16V
C131	1-104-665-11	ELECT	100uF	20.00%	16V
C133	1-162-921-11	CERAMIC CHIP	33PF	5%	50V
C140	1-115-156-11	CERAMIC CHIP	1uF		10V
C143	1-164-360-11	CERAMIC CHIP	0.1uF		16V
C145	1-164-360-11	CERAMIC CHIP	0.1uF		16V
C146	1-107-826-11	CERAMIC CHIP	0.1uF	10.00%	16V
C150	1-107-826-11	CERAMIC CHIP	0.1uF	10.00%	16V (US,CND)
C150	1-162-927-11	CERAMIC CHIP	100PF	5%	50V (AEP,UK)
C153	1-164-360-11	CERAMIC CHIP	0.1uF		16V
C159	1-162-969-11	CERAMIC CHIP	0.0068uF	10%	25V
C162	1-126-382-11	ELECT	100uF	20.00%	16V
C163	1-104-665-11	ELECT	100uF	20.00%	16V
C165	1-164-360-11	CERAMIC CHIP	0.1uF		16V
C167	1-162-920-11	CERAMIC CHIP	27PF	5%	50V
C168	1-162-919-11	CERAMIC CHIP	22PF	5%	50V
C171	1-115-412-11	CERAMIC CHIP	680PF	5.00%	25V
C172	1-162-927-11	CERAMIC CHIP	100PF	5%	50V
C181	1-115-412-11	CERAMIC CHIP	680PF	5.00%	25V
C182	1-162-927-11	CERAMIC CHIP	100PF	5%	50V
C183	1-162-968-11	CERAMIC CHIP	0.0047uF	10%	50V
C184	1-162-968-11	CERAMIC CHIP	0.0047uF	10%	50V
C185	1-125-891-11	CERAMIC CHIP	0.47uF	10.00%	10V
C190	1-115-156-11	CERAMIC CHIP	1uF		10V
C191	1-104-665-11	ELECT	100uF	20.00%	16V
C192	1-126-382-11	ELECT	100uF	20.00%	16V
C193	1-126-382-11	ELECT	100uF	20.00%	16V
C194	1-164-360-11	CERAMIC CHIP	0.1uF		16V
C196	1-164-360-11	CERAMIC CHIP	0.1uF		16V
C197	1-107-826-11	CERAMIC CHIP	0.1uF	10.00%	16V
C198	1-104-665-11	ELECT	100uF	20.00%	16V
		< CONNECTOR >			
CN101	1-569-914-11	SOCKET, CONNECTOR 21P			
CN102	1-785-953-11	CONNECTOR, FFC/FPC			
		< DIODE >			
D101	8-719-056-77	DIODE UDZ-TE-17-3.9B			
		< FERRITE BEAD >			
FB101	1-469-144-21	FERRITE	0UH		
FB103	1-469-144-21	FERRITE	0UH		
		< IC >			
IC101	8-752-402-31	IC CXD3017Q			
IC102	8-759-549-28	IC BA5974FP-E2			
IC103	8-752-089-74	IC CXA2581N-T4			
		< JUMPER RESISTOR >			
JR101	1-216-864-11	METAL CHIP	0	5%	1/16W
		< TRANSISTOR >			
Q101	8-729-049-31	TRANSISTOR	2SB710A-RTX		
Q102	8-729-920-85	TRANSISTOR	2SD1664-T100-QR		
		< RESISTOR >			
R101	1-216-821-11	METAL CHIP	1K	5%	1/16W (US,CND)
R102	1-216-845-11	METAL CHIP	100K	5%	1/16W
R103	1-216-835-11	METAL CHIP	15K	5%	1/16W
R104	1-216-839-11	METAL CHIP	33K	5%	1/16W
R106	1-216-821-11	METAL CHIP	1K	5%	1/16W

Ref. No.	Part No.	Description			Remarks
R107	1-216-833-11	METAL CHIP	10K	5%	1/16W
R108	1-216-827-11	METAL CHIP	3.3K	5%	1/16W (US,CND)
R109	1-216-857-11	METAL CHIP	1M	5%	1/16W
R111	1-216-846-11	METAL CHIP	120K	5%	1/16W
R114	1-218-745-11	METAL CHIP	160K	5%	1/10W
R116	1-216-797-11	METAL CHIP	10	5%	1/16W
R117	1-216-821-11	METAL CHIP	1K	5%	1/16W
R118	1-216-809-11	METAL CHIP	100	5%	1/16W
R119	1-216-826-11	METAL CHIP	2.7K	5%	1/16W
R120	1-216-835-11	METAL CHIP	15K	5%	1/16W
R122	1-216-845-11	METAL CHIP	100K	5%	1/16W
R123	1-216-833-11	METAL CHIP	10K	5%	1/16W
R124	1-216-845-11	METAL CHIP	100K	5%	1/16W
R131	1-216-813-11	METAL CHIP	220	5%	1/16W
R143	1-216-836-11	METAL CHIP	18K	5%	1/16W
R144	1-216-836-11	METAL CHIP	18K	5%	1/16W
R147	1-216-828-11	METAL CHIP	3.9K	5%	1/16W
R148	1-216-797-11	METAL CHIP	10	5%	1/16W
R149	1-216-797-11	METAL CHIP	10	5%	1/16W
R150	1-216-833-11	METAL CHIP	10K	5%	1/16W
R151	1-216-845-11	METAL CHIP	100K	5%	1/16W
R158	1-216-837-11	METAL CHIP	22K	5%	1/16W
R159	1-216-837-11	METAL CHIP	22K	5%	1/16W
R162	1-216-847-11	METAL CHIP	150K	5%	1/16W
R171	1-216-837-11	METAL CHIP	22K	5%	1/16W
R172	1-216-837-11	METAL CHIP	22K	5%	1/16W
R173	1-216-837-11	METAL CHIP	22K	5%	1/16W
R181	1-216-837-11	METAL CHIP	22K	5%	1/16W
R182	1-216-837-11	METAL CHIP	22K	5%	1/16W
R183	1-216-837-11	METAL CHIP	22K	5%	1/16W
R190	1-216-813-11	METAL CHIP	220	5%	1/16W
R191	1-216-839-11	METAL CHIP	33K	5%	1/16W
R192	1-216-839-11	METAL CHIP	33K	5%	1/16W
R193	1-216-846-11	METAL CHIP	120K	5%	1/16W
R194	1-216-845-11	METAL CHIP	100K	5%	1/16W
R195	1-216-853-11	METAL CHIP	470K	5%	1/16W
R196	1-216-825-11	METAL CHIP	2.2K	5%	1/16W
R197	1-216-821-11	METAL CHIP	1K	5%	1/16W
		< NETWORK RESISTOR >			
RN101	1-233-576-11	RES, CHIP NETWORK 100			
		< SWITCH >			
S101	1-771-853-11	SWITCH, DETECTION (LIMIT IN SW)			
		< VIBRATOR >			
X101	1-781-947-11	VIBRATOR, CRYSTAL 16.9344MHz			

****

	A-4732-477-A	CONTROL BOARD, COMPLETE			
		**********			
	1-757-704-11	CABLE, FLEXIBLE FLAT (15 CORE)			
	1-757-706-11	CABLE, FLEXIBLE FLAT (17 CORE)			
		< CAPACITOR >			
C819	1-124-259-11	ELECT	4.7uF	20.00%	16V
C820	1-162-970-11	CERAMIC CHIP	0.01uF	10%	25V

Ref. No.	Part No.	Description			Remarks
		< CONNECTOR >			
CN807	1-568-834-11	SOCKET, CONNECTOR 15P			
* CN808	1-569-934-11	SOCKET, CONNECTOR 17P			
		< DIODE >			
D814	6-500-549-01	DIODE LTL1WKKSE-002A (CD■)			
D815	6-500-549-01	DIODE LTL1WKKSE-002A (CD▶II)			
D816	6-500-549-01	DIODE LTL1WKKSE-002A (TUNER BAND)			
D817	6-500-549-01	DIODE LTL1WKKSE-002A (TUNER BAND)			
D818	6-500-549-01	DIODE LTL1WKKSE-002A (DSG)			
D820	6-500-548-01	DIODE LTL-816HR-004A (STANDBY I/⏻)			
D823	6-500-548-01	DIODE LTL-816HR-004A (CD SYNC)			
D828	6-500-549-01	DIODE LTL1WKKSE-002A (TAPE A ▶)			
D829	6-500-549-01	DIODE LTL1WKKSE-002A (TAPE A ■)			
D830	6-500-549-01	DIODE LTL1WKKSE-002A (TAPE B ◀▶)			
D831	6-500-549-01	DIODE LTL1WKKSE-002A (TAPE B ■)			
D833	6-500-548-01	DIODE LTL-816HR-004A (1 DISC)			
		< IC >			
IC605	8-759-827-70	IC NJL64H400A-1 (R)			
		< JUMPER RESISTOR >			
JR801	1-216-295-91	SHORT CHIP	0		
JR802	1-216-295-91	SHORT CHIP	0		
JR803	1-216-295-91	SHORT CHIP	0		
JR804	1-162-964-11	CERAMIC CHIP	0.001uF	10%	50V
		< COIL >			
L802	1-414-142-11	INDUCTOR	1uH		
		< TRANSISTOR >			
Q815	8-729-900-53	TRANSISTOR	DTC114EKA-T146		
Q816	8-729-900-53	TRANSISTOR	DTC114EKA-T146		
Q817	8-729-900-53	TRANSISTOR	DTC114EKA-T146		
Q818	8-729-900-53	TRANSISTOR	DTC114EKA-T146		
Q819	8-729-900-53	TRANSISTOR	DTC114EKA-T146		
Q821	8-729-900-53	TRANSISTOR	DTC114EKA-T146		
Q822	8-729-900-53	TRANSISTOR	DTC114EKA-T146		
Q825	8-729-900-53	TRANSISTOR	DTC114EKA-T146		
Q853	8-729-900-53	TRANSISTOR	DTC114EKA-T146		
		< RESISTOR >			
R801	1-216-833-11	METAL CHIP	10K	5%	1/16W
R802	1-216-814-11	METAL CHIP	270	5%	1/16W
R803	1-216-815-11	METAL CHIP	330	5%	1/16W
R804	1-216-817-11	METAL CHIP	470	5%	1/16W
R805	1-216-818-11	METAL CHIP	560	5%	1/16W
R811	1-216-833-11	METAL CHIP	10K	5%	1/16W
R812	1-216-814-11	METAL CHIP	270	5%	1/16W
R813	1-216-815-11	METAL CHIP	330	5%	1/16W
R814	1-216-817-11	METAL CHIP	470	5%	1/16W
R815	1-216-818-11	METAL CHIP	560	5%	1/16W
R816	1-216-819-11	METAL CHIP	680	5%	1/16W
R817	1-216-821-11	METAL CHIP	1K	5%	1/16W
R818	1-216-822-11	METAL CHIP	1.2K	5%	1/16W
R819	1-216-824-11	METAL CHIP	1.8K	5%	1/16W
R820	1-216-833-11	METAL CHIP	10K	5%	1/16W

CONTROL | DISK SENSOR | DRIVER | HEAD PHONE | IN OUT SW

Ref. No.	Part No.	Description			Remarks
R821	1-216-833-11	METAL CHIP	10K	5%	1/16W
R822	1-216-814-11	METAL CHIP	270	5%	1/16W
R823	1-216-815-11	METAL CHIP	330	5%	1/16W
R824	1-216-817-11	METAL CHIP	470	5%	1/16W
R825	1-216-818-11	METAL CHIP	560	5%	1/16W
R826	1-216-819-11	METAL CHIP	680	5%	1/16W
R827	1-216-821-11	METAL CHIP	1K	5%	1/16W
R828	1-216-822-11	METAL CHIP	1.2K	5%	1/16W
R829	1-216-824-11	METAL CHIP	1.8K	5%	1/16W
R830	1-216-826-11	METAL CHIP	2.7K	5%	1/16W
R835	1-216-845-11	METAL CHIP	100K	5%	1/16W
R836	1-216-845-11	METAL CHIP	100K	5%	1/16W
R837	1-216-845-11	METAL CHIP	100K	5%	1/16W
R838	1-216-845-11	METAL CHIP	100K	5%	1/16W
R839	1-216-845-11	METAL CHIP	100K	5%	1/16W
R840	1-216-845-11	METAL CHIP	100K	5%	1/16W
R841	1-216-845-11	METAL CHIP	100K	5%	1/16W
R842	1-216-845-11	METAL CHIP	100K	5%	1/16W
R851	1-249-414-11	CARBON	560	5%	1/4W F
R852	1-216-037-00	METAL CHIP	330	5%	1/10W
R855	1-216-829-11	METAL CHIP	4.7K	5%	1/16W
R856	1-216-817-11	METAL CHIP	470	5%	1/16W
R859	1-216-818-11	METAL CHIP	560	5%	1/16W
R885	1-249-414-11	CARBON	560	5%	1/4W F
R899	1-216-818-11	METAL CHIP	560	5%	1/16W
		< VARIABLE RESISTOR >			
RV801	1-473-392-11	ENCODER, ROTARY (VOLUME)			
RV802	1-418-859-11	ENCODER, ROTARY (TREBLE)			
RV803	1-418-859-11	ENCODER, ROTARY (BASS)			
RV804	1-476-704-11	ENCODER (ROTARY TYPE) (FUNCTION)			
		< SWITCH >			
S801	1-786-220-11	SWITCH, KEY BOARD (CD ▶II)			
S802	1-786-220-11	SWITCH, KEY BOARD (CD I◀◀/◀◀)			
S803	1-786-220-11	SWITCH, KEY BOARD (PLAY MODE)			
S804	1-786-220-11	SWITCH, KEY BOARD (REPEAT)			
S811	1-786-220-11	SWITCH, KEY BOARD (TAPE A ▶▶)			
S812	1-786-220-11	SWITCH, KEY BOARD (TAPE A ◀◀)			
S813	1-786-220-11	SWITCH, KEY BOARD (TAPE A ▶)			
S814	1-786-220-11	SWITCH, KEY BOARD (TAPE A ■)			
S815	1-786-220-11	SWITCH, KEY BOARD (DSG)			
S817	1-786-220-11	SWITCH, KEY BOARD (CD SYNC)			
S818	1-786-220-11	SWITCH, KEY BOARD (TAPE REC ●)			
S819	1-786-220-11	SWITCH, KEY BOARD (TAPE B II)			
S820	1-786-220-11	SWITCH, KEY BOARD (STANDBY I/⏻)			
S821	1-786-220-11	SWITCH, KEY BOARD (CD ▶▶I/▶▶)			
S822	1-786-220-11	SWITCH, KEY BOARD (CD ■)			
S823	1-786-220-11	SWITCH, KEY BOARD (TUNING MODE)			
S824	1-786-220-11	SWITCH, KEY BOARD (TUNING +)			
S825	1-786-220-11	SWITCH, KEY BOARD (TUNING –)			
S826	1-786-220-11	SWITCH, KEY BOARD (TUNER BAND)			
S827	1-786-220-11	SWITCH, KEY BOARD (TAPE B ◀◀)			
S828	1-786-220-11	SWITCH, KEY BOARD (TAPE B ▶▶)			
S829	1-786-220-11	SWITCH, KEY BOARD (TAPE B ■)			
S830	1-786-220-11	SWITCH, KEY BOARD (TAPE B ◀▶)			

****

Ref. No.	Part No.	Description			Remarks
	1-678-463-11	DISK SENSOR BOARD			
		**********			
		< IC >			
IC751	8-749-924-30	PHOTO REFLECTOR GP2S28			
		< RESISTOR >			
R751	1-249-407-11	CARBON	150	5%	1/4W F

****

	1-678-460-11	DRIVER BOARD			
		**********			
		< CAPACITOR >			
C701	1-124-261-00	ELECT	10uF	20%	50V
C705	1-124-261-00	ELECT	10uF	20%	50V
C706	1-164-159-11	CERAMIC	0.1uF		50V
C707	1-164-159-11	CERAMIC	0.1uF		50V
		< CONNECTOR >			
CN701	1-785-324-11	PIN, CONNECTOR (STRAIGHT) 12P			
CN702	1-785-328-11	PIN, CONNECTOR (LIGHT ANGRE)2P			
CN703	1-785-331-11	PIN, CONNECTOR (LIGHT ANGLE)5P			
CN704	1-785-329-11	PIN, CONNECTOR (LIGHT ANGLE)3P			
CN705	1-785-329-21	PIN, CONNECTOR (LIGHT ANGLE)3P			
		< IC >			
IC701	8-759-598-69	IC BA6956AN			
		< TRANSISTOR >			
Q701	8-729-029-66	TRANSISTOR	RT1N141S-TP		
		< RESISTOR >			
R701	1-249-429-11	CARBON	10K	5%	1/4W
R702	1-249-401-11	CARBON	47	5%	1/4W F
R705	1-249-435-11	CARBON	33K	5%	1/4W
R706	1-249-417-11	CARBON	1K	5%	1/4W F
R707	1-249-429-11	CARBON	10K	5%	1/4W

****

	1-681-012-12	HEAD PHONE BOARD			
		**********			
		< CAPACITOR >			
C135	1-163-009-91	CERAMIC CHIP	0.001uF	10.00%	50V
C235	1-163-009-91	CERAMIC CHIP	0.001uF	10.00%	50V
		< JACK >			
J301	1-794-453-11	JACK (PHONES)			

****

	1-678-462-11	IN OUT SW BOARD			
		**********			
		< SWITCH >			
S741	1-771-821-11	SWITCH, PUSH (1 KEY) (IN)			
S742	1-771-821-11	SWITCH, PUSH (1 KEY) (OUT)			

****

Ref. No.	Part No.	Description			Remarks
	1-687-871-11	JACK BOARD			
		**********			
		< CONNECTOR >			
CN305	1-506-468-11	PIN, CONNECTOR 3P			
		< JACK >			
PJ301	1-815-045-11	JACK, PIN 2P (L/R AUDIO IN MD(VIDEO))			
		< RESISTOR >			
R116	1-216-834-11	METAL CHIP	12K	5%	1/16W
R117	1-216-829-11	METAL CHIP	4.7K	5%	1/16W
R216	1-216-834-11	METAL CHIP	12K	5%	1/16W
R217	1-216-829-11	METAL CHIP	4.7K	5%	1/16W
**********					
	1-687-872-11	LCD BOARD			
		**********			
		< CONNECTOR >			
CN802	1-793-599-11	CONNECTOR, FFC/FPC (ZIF) 17P			
CN804	1-793-601-11	CONNECTOR, FFC/FPC (ZIF) 21P			
		< DIODE >			
D801	8-719-085-55	DIODE SY3318-V-L (LCD BACKLIGHT)			
D802	8-719-085-55	DIODE SY3318-V-L (LCD BACKLIGHT)			
D803	8-719-085-55	DIODE SY3318-V-L (LCD BACKLIGHT)			
D804	8-719-085-55	DIODE SY3318-V-L (LCD BACKLIGHT)			
D850	8-719-085-55	DIODE SY3318-V-L (LCD BACKLIGHT)			
D851	8-719-085-55	DIODE SY3318-V-L (LCD BACKLIGHT)			
		< LIQUID CRYSTAL DISPLAY >			
LCD801	1-803-542-21	DISPLAY PANEL, LIQUID CRYSTAL			
**********					
	1-681-016-12	LED BOARD			
		**********			
		< DIODE >			
D811	8-719-056-12	DIODE SML79420C-TP15 (CD3)			
D812	8-719-056-12	DIODE SML79420C-TP15 (CD2)			
D813	8-719-056-12	DIODE SML79420C-TP15 (CD1)			
		< TRANSISTOR >			
Q809	8-729-900-53	TRANSISTOR	DTC114EKA-T146		
Q810	8-729-900-53	TRANSISTOR	DTC114EKA-T146		
Q811	8-729-900-53	TRANSISTOR	DTC114EKA-T146		
Q812	8-729-900-53	TRANSISTOR	DTC114EKA-T146		
Q813	8-729-900-53	TRANSISTOR	DTC114EKA-T146		
Q814	8-729-900-53	TRANSISTOR	DTC114EKA-T146		
		< RESISTOR >			
R806	1-216-819-11	METAL CHIP	680	5%	1/16W
R807	1-216-821-11	METAL CHIP	1K	5%	1/16W
R808	1-216-822-11	METAL CHIP	1.2K	5%	1/16W
R809	1-216-824-11	METAL CHIP	1.8K	5%	1/16W
R810	1-216-826-11	METAL CHIP	2.7K	5%	1/16W
R845	1-216-819-11	METAL CHIP	680	5%	1/16W
R846	1-216-819-11	METAL CHIP	680	5%	1/16W
R847	1-216-819-11	METAL CHIP	680	5%	1/16W
R848	1-216-819-11	METAL CHIP	680	5%	1/16W
R849	1-216-819-11	METAL CHIP	680	5%	1/16W
R850	1-216-819-11	METAL CHIP	680	5%	1/16W
		< SWITCH >			
S805	1-786-220-11	SWITCH, KEY BOARD (CD3⏏)			
S806	1-786-220-11	SWITCH, KEY BOARD (CD3)			
S807	1-786-220-11	SWITCH, KEY BOARD (CD2⏏)			
S808	1-786-220-11	SWITCH, KEY BOARD (CD2)			
S809	1-786-220-11	SWITCH, KEY BOARD (CD1⏏)			
S810	1-786-220-11	SWITCH, KEY BOARD (CD1)			
**********					
	A-4732-474-A	MAIN BOARD, COMPLETE (AEP,UK)			
	A-4733-359-A	MAIN BOARD, COMPLETE (US,CND)			
	A-4734-564-A	MAIN BOARD, COMPLETE (E51)			
		**********			
	4-217-354-11	BUSHING, INSULATING			
	4-230-078-01	SCREW, +BV TAPPING (US,CND)			
	4-230-078-12	SCREW, +BV TAPPING (AEP,UK)			
	7-685-546-14	SCREW +BTP 3X8 TYPE2 N-S			
	7-685-647-79	SCREW +BVTP 3X10 TYPE2 N-S			
		< CAPACITOR >			
C101	1-126-963-11	ELECT	4.7uF	20.00%	50V (EXCEPT E51)
C101	1-126-964-11	ELECT	10uF	20.00%	50V (E51)
C102	1-126-963-11	ELECT	4.7uF	20.00%	50V
C103	1-124-259-11	ELECT	4.7uF	20.00%	16V
C104	1-126-963-11	ELECT	4.7uF	20.00%	50V
C105	1-126-963-11	ELECT	4.7uF	20.00%	50V (EXCEPT E51)
C105	1-126-964-11	ELECT	10uF	20.00%	50V (E51)
C106	1-126-963-11	ELECT	4.7uF	20.00%	50V
C107	1-164-227-11	CERAMIC CHIP	0.022uF	10%	25V (AEP,UK)
C107	1-164-245-11	CERAMIC CHIP	0.015uF	10.00%	25V (US,CND,E51)
C108	1-162-927-11	CERAMIC CHIP	100PF	5%	50V
C110	1-126-963-11	ELECT	4.7uF	20.00%	50V
C111	1-164-245-11	CERAMIC CHIP	0.015uF	10.00%	25V
C112	1-164-245-11	CERAMIC CHIP	0.015uF	10.00%	25V
C113	1-107-826-11	CERAMIC CHIP	0.1uF	10.00%	16V
C114	1-107-826-11	CERAMIC CHIP	0.1uF	10.00%	16V
C115	1-162-966-11	CERAMIC CHIP	0.0022uF	10%	50V
C118	1-124-259-11	ELECT	4.7uF	20.00%	16V
C119	1-126-963-11	ELECT	4.7uF	20.00%	50V
C121	1-126-963-11	ELECT	4.7uF	20.00%	50V (EXCEPT E51)
C121	1-126-964-11	ELECT	10uF	20.00%	50V (E51)
C122	1-162-962-11	CERAMIC CHIP	470PF	10%	50V
C126	1-126-965-11	ELECT	22uF	20.00%	50V
C127	1-130-495-00	MYLAR	0.1uF	5%	50V
C130	1-126-967-11	ELECT	47uF	20.00%	50V

MAIN

Ref. No.	Part No.	Description			Remarks
C132	1-104-665-11	ELECT	100uF	20.00%	16V
C133	1-130-495-00	MYLAR	0.1uF	5%	50V
C150	1-162-927-11	CERAMIC CHIP	100PF	5%	50V (AEP,UK)
C151	1-162-964-11	CERAMIC CHIP	0.001uF	10%	50V (AEP,UK)
C201	1-126-963-11	ELECT	4.7uF	20.00%	50V (EXCEPT E51)
C201	1-126-964-11	ELECT	10uF	20.00%	50V (E51)
C202	1-124-259-11	ELECT	4.7uF	20.00%	16V
C203	1-126-963-11	ELECT	4.7uF	20.00%	50V
C204	1-126-963-11	ELECT	4.7uF	20.00%	50V
C205	1-126-963-11	ELECT	4.7uF	20.00%	50V (EXCEPT E51)
C205	1-126-964-11	ELECT	10uF	20.00%	50V (E51)
C206	1-126-963-11	ELECT	4.7uF	20.00%	50V
C207	1-164-227-11	CERAMIC CHIP	0.022uF	10%	25V (AEP,UK)
C207	1-164-245-11	CERAMIC CHIP	0.015uF	10.00%	25V (US,CND,E51)
C208	1-162-927-11	CERAMIC CHIP	100PF	5%	50V
C210	1-126-963-11	ELECT	4.7uF	20.00%	50V
C211	1-164-245-11	CERAMIC CHIP	0.015uF	10.00%	25V
C212	1-164-245-11	CERAMIC CHIP	0.015uF	10.00%	25V
C213	1-107-826-11	CERAMIC CHIP	0.1uF	10.00%	16V
C214	1-107-826-11	CERAMIC CHIP	0.1uF	10.00%	16V
C215	1-162-966-11	CERAMIC CHIP	0.0022uF	10%	50V
C218	1-126-963-11	ELECT	4.7uF	20.00%	50V
C219	1-126-963-11	ELECT	4.7uF	20.00%	50V
C221	1-126-963-11	ELECT	4.7uF	20.00%	50V (EXCEPT E51)
C221	1-126-964-11	ELECT	10uF	20.00%	50V (E51)
C222	1-162-962-11	CERAMIC CHIP	470PF	10%	50V
C226	1-126-965-11	ELECT	22uF	20.00%	50V
C227	1-130-495-00	MYLAR	0.1uF	5%	50V
C230	1-126-967-11	ELECT	47uF	20.00%	50V
C232	1-104-665-11	ELECT	100uF	20.00%	16V
C233	1-130-495-00	MYLAR	0.1uF	5%	50V
C250	1-162-927-11	CERAMIC CHIP	100PF	5%	50V (AEP,UK)
C251	1-162-964-11	CERAMIC CHIP	0.001uF	10%	50V (AEP,UK)
C301	1-126-955-11	ELECT	4700uF	20.00%	35V
C302	1-126-955-11	ELECT	4700uF	20.00%	35V
C303	1-115-339-11	CERAMIC CHIP	0.1uF	10.00%	50V
C304	1-115-339-11	CERAMIC CHIP	0.1uF	10.00%	50V
C305	1-126-941-11	ELECT	470uF	20.00%	16V
C306	1-126-767-11	ELECT	1000uF	20.00%	16V
C307	1-107-826-11	CERAMIC CHIP	0.1uF	10.00%	16V
C311	1-104-665-11	ELECT	100uF	20.00%	16V
C312	1-126-942-61	ELECT	1000uF	20.00%	25V
C313	1-126-944-11	ELECT	3300uF	20.00%	25V
C314	1-104-666-11	ELECT	220uF	20.00%	16V
C315	1-107-826-11	CERAMIC CHIP	0.1uF	10.00%	16V
C316	1-104-666-11	ELECT	220uF	20.00%	16V
C317	1-107-826-11	CERAMIC CHIP	0.1uF	10.00%	16V
C320	1-126-941-11	ELECT	470uF	20.00%	16V
C321	1-107-826-11	CERAMIC CHIP	0.1uF	10.00%	16V
C322	1-104-665-11	ELECT	100uF	20.00%	16V
C323	1-107-826-11	CERAMIC CHIP	0.1uF	10.00%	16V
C324	1-104-666-11	ELECT	220uF	20.00%	16V
C325	1-104-665-11	ELECT	100uF	20.00%	16V
C329	1-107-826-11	CERAMIC CHIP	0.1uF	10.00%	16V
C330	1-104-665-11	ELECT	100uF	20.00%	16V
C331	1-104-665-11	ELECT	100uF	20.00%	16V
C333	1-126-964-11	ELECT	10uF	20.00%	50V (EXCEPT E51)
C333	1-126-947-11	ELECT	47uF	20.00%	25V (E51)
C334	1-126-940-11	ELECT	330uF	20.00%	16V
C337	1-107-826-11	CERAMIC CHIP	0.1uF	10.00%	16V
C338	1-126-963-11	ELECT	4.7uF	20.00%	50V (AEP,UK)
C338	1-128-582-11	ELECT	10uF	20.00%	100V (US,CND,E51)
C340	1-126-965-11	ELECT	22uF	20.00%	50V (AEP,UK)
C340	1-128-560-11	ELECT	22uF	20.00%	100V (US,CND,E51)
C350	1-162-970-11	CERAMIC CHIP	0.01uF	10%	25V
C351	1-126-947-11	ELECT	47uF	20.00%	25V
C352	1-162-964-11	CERAMIC CHIP	0.001uF	10%	50V
C353	1-162-964-11	CERAMIC CHIP	0.001uF	10%	50V
C354	1-162-964-11	CERAMIC CHIP	0.001uF	10%	50V
C356	1-126-941-11	ELECT	470uF	20.00%	16V
C365	1-107-826-11	CERAMIC CHIP	0.1uF	10.00%	16V
C371	1-162-964-11	CERAMIC CHIP	0.001uF	10%	50V
C372	1-162-964-11	CERAMIC CHIP	0.001uF	10%	50V
C373	1-162-964-11	CERAMIC CHIP	0.001uF	10%	50V
C374	1-162-964-11	CERAMIC CHIP	0.001uF	10%	50V
C375	1-162-970-11	CERAMIC CHIP	0.01uF	10%	25V
C390	1-164-230-11	CERAMIC CHIP	220PF	5.00%	50V
C391	1-164-230-11	CERAMIC CHIP	220PF	5.00%	50V
C392	1-164-230-11	CERAMIC CHIP	220PF	5.00%	50V
C393	1-164-230-11	CERAMIC CHIP	220PF	5.00%	50V
C394	1-164-230-11	CERAMIC CHIP	220PF	5.00%	50V
C395	1-164-230-11	CERAMIC CHIP	220PF	5.00%	50V
C397	1-126-963-11	ELECT	4.7uF	20.00%	50V
C398	1-163-227-11	CERAMIC CHIP	10PF	0.50PF	50V
C399	1-162-963-11	CERAMIC CHIP	680PF	10%	50V (AEP,UK)
C400	1-163-227-11	CERAMIC CHIP	10PF	0.50PF	50V
C601	1-125-891-11	CERAMIC CHIP	0.47uF	10.00%	10V
C602	1-162-968-11	CERAMIC CHIP	0.0047uF	10%	50V
C603	1-107-826-11	CERAMIC CHIP	0.1uF	10.00%	16V
C801	1-162-970-11	CERAMIC CHIP	0.01uF	10%	25V
C802	1-162-970-11	CERAMIC CHIP	0.01uF	10%	25V
C803	1-162-970-11	CERAMIC CHIP	0.01uF	10%	25V
C804	1-164-160-11	CERAMIC CHIP	20PF	5.00%	50V
C805	1-162-919-11	CERAMIC CHIP	22PF	5%	50V
C806	1-107-826-11	CERAMIC CHIP	0.1uF	10.00%	16V
C807	1-104-665-11	ELECT	100uF	20.00%	16V
C810	1-107-826-11	CERAMIC CHIP	0.1uF	10.00%	16V
C811	1-107-826-11	CERAMIC CHIP	0.1uF	10.00%	16V
C812	1-126-947-11	ELECT	47uF	20.00%	16V
C813	1-115-456-21	CAPACITOR	0.22F		5.5V

Ref. No.	Part No.	Description			Remarks
C815	1-162-970-11	CERAMIC CHIP	0.01uF	10%	25V (AEP,UK)
C816	1-126-947-11	ELECT	47uF	20.00%	16V (AEP,UK)
C817	1-162-970-11	CERAMIC CHIP	0.01uF	10%	25V (AEP,UK)
C818	1-164-185-11	CERAMIC CHIP	13PF	5.00%	50V (AEP,UK)
C821	1-162-961-11	CERAMIC CHIP	330PF	10%	50V (AEP,UK)
C822	1-126-961-11	ELECT	2.2uF	20.00%	50V (AEP,UK)
C823	1-164-185-11	CERAMIC CHIP	13PF	5.00%	50V (AEP,UK)
C824	1-164-739-11	CERAMIC CHIP	560PF	5.00%	50V (AEP,UK)
C888	1-162-964-11	CERAMIC CHIP	0.001uF	10%	50V
		< CONNECTOR >			
CN302	1-569-928-11	SOCKET, CONNECTOR 11P			
CN303	1-569-928-11	SOCKET, CONNECTOR 11P			
CN304	1-569-937-11	SOCKET, CONNECTOR 21P			
CN307	1-506-469-11	PIN, CONNECTOR 4P			
* CN313	1-568-939-11	PIN, CONNECTOR 12P			
CN801	1-793-600-11	CONNECTOR, FFC/FPC (ZIF) 17P			
CN803	1-793-602-11	CONNECTOR, FFC/FPC (ZIF) 21P			
CN805	1-568-834-11	SOCKET, CONNECTOR 15P			
* CN806	1-569-934-11	SOCKET, CONNECTOR 17P			
* CN809	1-506-984-11	PIN, CONNECTOR (PC BOARD) 2P			
* CN810	1-506-984-11	PIN, CONNECTOR (PC BOARD) 2P			
		< DIODE >			
D309	8-719-109-97	DIODE MTZJ-T-77-6.8C (EXCEPT E51)			
D309	8-719-921-63	DIODE MTZJ-T-77-7.5B (E51)			
D314	8-719-109-89	DIODE MTZJ-T-77-5.6B			
D319	8-719-921-63	DIODE MTZJ-T-77-7.5B			
D321	8-719-110-31	DIODE MTZJ-T-77-12B			
D323	8-719-110-14	DIODE MTZJ-T-77-9.1C			
D350	8-719-109-89	DIODE MTZJ-T-77-5.6B			
D805	8-719-982-11	DIODE MTZJ-T-77-4.3B (AEP,UK)			
D806	8-719-991-33	DIODE 1SS133T-77			
D807	8-719-991-33	DIODE 1SS133T-77			
D808	8-719-991-33	DIODE 1SS133T-77			
D809	8-719-200-82	DIODE 11ES2-TA1B			
D810	8-719-200-82	DIODE 11ES2-TA1B			
D825	8-719-991-33	DIODE 1SS133T-77			
D827	8-719-991-33	DIODE 1SS133T-77			
		< GROUND TERMINAL >			
GP301	1-537-770-21	TERMINAL BOARD, GROUND			
GP302	1-537-770-21	TERMINAL BOARD, GROUND			
		< IC >			
IC101	8-759-584-38	IC TDA7296			
IC201	8-759-584-38	IC TDA7296			
IC301	6-700-261-01	IC BD3861FS			
IC303	8-759-359-49	IC NJM3414AV(TE2)			
IC304	8-759-646-54	IC KIA7808API			

Ref. No.	Part No.	Description			Remarks
IC305	8-759-584-40	IC KA7908			
IC308	8-749-016-00	IC HVE0024 (CD DIGITAL OUT OPTICAL)			
IC311	8-759-646-54	IC KIA7808API			
IC601	6-800-361-01	IC M30622MGA-A67FP			
IC602	8-759-153-90	IC uPD7225GB-3B7			
IC603	8-759-557-36	IC BU1924F-E2 (AEP,UK)			
IC604	8-759-637-58	IC PST592C-T			
IC606	6-700-176-01	IC MC74VHCT04ADTR2			
		< JUMPER RESISTOR >			
JR304	1-216-864-11	METAL CHIP	0	5%	1/16W
JR307	1-216-864-11	METAL CHIP	0	5%	1/16W
JR308	1-216-864-11	METAL CHIP	0	5%	1/16W
JR310	1-216-864-11	METAL CHIP	0	5%	1/16W
		< COIL >			
L101	1-422-009-13	COIL, AIR-CORE (AEP,UK)			
L102	1-410-750-41	INDUCTOR	0.47uH		
L201	1-422-009-13	COIL, AIR-CORE (AEP,UK)			
		< TRANSISTOR >			
Q110	8-729-920-31	TRANSISTOR	DTC343TK-T-146		
Q150	8-729-920-31	TRANSISTOR	DTC343TK-T-146		
Q210	8-729-920-31	TRANSISTOR	DTC343TK-T-146		
Q250	8-729-920-31	TRANSISTOR	DTC343TK-T-146		
Q303	8-729-038-55	TRANSISTOR	KRA103S		
Q304	8-729-038-67	TRANSISTOR	KRC102S		
Q305	8-729-900-53	TRANSISTOR	DTC114EKA-T146		
Q310	8-729-019-00	TRANSISTOR	KTC2026		
Q311	8-759-068-54	TRANSISTOR	KRA102S		
Q312	8-729-038-68	TRANSISTOR	KRC103S		
Q314	8-729-028-54	TRANSISTOR	KTC3205-Y-AT		
Q315	8-759-068-54	TRANSISTOR	KRA102S		
Q316	8-729-038-68	TRANSISTOR	KRC103S		
Q330	8-729-038-68	TRANSISTOR	KRC103S		
Q350	8-729-019-00	TRANSISTOR	KTC2026		
Q360	8-729-028-54	TRANSISTOR	KTC3205-Y-AT		
Q361	8-729-202-56	TRANSISTOR	2SA950-Y-TPE2		
Q362	8-729-038-68	TRANSISTOR	KRC103S		
Q364	8-729-202-56	TRANSISTOR	2SA950-Y-TPE2		
Q365	8-729-038-68	TRANSISTOR	KRC103S		
Q366	8-729-202-56	TRANSISTOR	2SA950-Y-TPE2		
Q367	8-729-038-68	TRANSISTOR	KRC103S		
Q801	8-729-901-81	TRANSISTOR	2SC2412K-T-146-R (AEP,UK)		
Q802	8-729-037-02	TRANSISTOR	KTA1266Y-AT		
Q803	8-729-038-67	TRANSISTOR	KRC102S		
Q804	8-729-038-67	TRANSISTOR	KRC102S		
Q805	8-729-037-02	TRANSISTOR	KTA1266Y-AT		
Q806	8-729-038-67	TRANSISTOR	KRC102S		
Q808	8-729-901-81	TRANSISTOR	2SC2412K-T-146-R		
Q830	8-729-037-02	TRANSISTOR	KTA1266Y-AT		
Q831	8-729-038-67	TRANSISTOR	KRC102S		
		< RESISTOR >			
R101	1-216-821-11	METAL CHIP	1K	5%	1/16W
R102	1-216-821-11	METAL CHIP	1K	5%	1/16W
R104	1-216-833-11	METAL CHIP	10K	5%	1/16W
R105	1-216-829-11	METAL CHIP	4.7K	5%	1/16W

MAIN

Ref. No.	Part No.	Description			Remarks
R106	1-216-833-11	METAL CHIP	10K	5%	1/16W
R107	1-216-832-11	METAL CHIP	8.2K	5%	1/16W
R108	1-216-827-11	METAL CHIP	3.3K	5%	1/16W
R109	1-216-821-11	METAL CHIP	1K	5%	1/16W
R112	1-216-827-11	METAL CHIP	3.3K	5%	1/16W
R119	1-216-841-11	METAL CHIP	47K	5%	1/16W
R121	1-216-808-11	METAL CHIP	82	5%	1/16W
R123	1-216-818-11	METAL CHIP	560	5%	1/16W
R124	1-216-839-11	METAL CHIP	33K	5%	1/16W
R125	1-216-841-11	METAL CHIP	47K	5%	1/16W
R126	1-216-845-11	METAL CHIP	100K	5%	1/16W
R127	1-249-389-11	CARBON	4.7	5%	1/4W F
R130	1-216-821-11	METAL CHIP	1K	5%	1/16W
R131	1-216-817-11	METAL CHIP	470	5%	1/16W
R133	1-216-821-11	METAL CHIP	1K	5%	1/16W
R201	1-216-821-11	METAL CHIP	1K	5%	1/16W
R202	1-216-821-11	METAL CHIP	1K	5%	1/16W
R204	1-216-833-11	METAL CHIP	10K	5%	1/16W
R205	1-216-829-11	METAL CHIP	4.7K	5%	1/16W
R206	1-216-833-11	METAL CHIP	10K	5%	1/16W
R207	1-216-832-11	METAL CHIP	8.2K	5%	1/16W
R208	1-216-827-11	METAL CHIP	3.3K	5%	1/16W
R209	1-216-821-11	METAL CHIP	1K	5%	1/16W
R212	1-216-827-11	METAL CHIP	3.3K	5%	1/16W
R219	1-216-841-11	METAL CHIP	47K	5%	1/16W
R221	1-216-808-11	METAL CHIP	82	5%	1/16W
R223	1-216-818-11	METAL CHIP	560	5%	1/16W
R224	1-216-839-11	METAL CHIP	33K	5%	1/16W
R225	1-216-841-11	METAL CHIP	47K	5%	1/16W
R226	1-216-845-11	METAL CHIP	100K	5%	1/16W
R227	1-249-389-11	CARBON	4.7	5%	1/4W F
R230	1-216-821-11	METAL CHIP	1K	5%	1/16W
R231	1-216-817-11	METAL CHIP	470	5%	1/16W
R233	1-216-821-11	METAL CHIP	1K	5%	1/16W
R303	1-216-805-11	METAL CHIP	47	5%	1/16W
R310	1-216-805-11	METAL CHIP	47	5%	1/16W
R314	1-216-817-11	METAL CHIP	470	5%	1/16W
R317	1-216-821-11	METAL CHIP	1K	5%	1/16W
R318	1-216-805-11	METAL CHIP	47	5%	1/16W
R325	1-216-841-11	METAL CHIP	47K	5%	1/16W
R326	1-216-841-11	METAL CHIP	47K	5%	1/16W
R334	1-216-829-11	METAL CHIP	4.7K	5%	1/16W
R335	1-216-833-11	METAL CHIP	10K	5%	1/16W
R336	1-216-825-11	METAL CHIP	2.2K	5%	1/16W (US,CND,E51)
R336	1-216-833-11	METAL CHIP	10K	5%	1/16W (AEP,UK)
R343	1-216-841-11	METAL CHIP	47K	5%	1/16W
R345	1-216-843-11	METAL CHIP	68K	5%	1/16W
R346	1-216-843-11	METAL CHIP	68K	5%	1/16W
R347	1-216-841-11	METAL CHIP	47K	5%	1/16W
R348	1-216-841-11	METAL CHIP	47K	5%	1/16W
R350	1-216-833-11	METAL CHIP	10K	5%	1/16W
R351	1-216-817-11	METAL CHIP	470	5%	1/16W
R353	1-216-829-11	METAL CHIP	4.7K	5%	1/16W
R356	1-216-825-11	METAL CHIP	2.2K	5%	1/16W
R357	1-216-827-11	METAL CHIP	3.3K	5%	1/16W
R358	1-216-827-11	METAL CHIP	3.3K	5%	1/16W
R359	1-216-841-11	METAL CHIP	47K	5%	1/16W
R360	1-216-841-11	METAL CHIP	47K	5%	1/16W
R361	1-216-841-11	METAL CHIP	47K	5%	1/16W
R390	1-249-414-11	CARBON	560	5%	1/4W F
R394	1-216-825-11	METAL CHIP	2.2K	5%	1/16W (US,CND,E51)
R394	1-216-864-11	METAL CHIP	0	5%	1/16W (AEP,UK)
R513	1-216-846-11	METAL CHIP	120K	5%	1/16W
R517	1-216-833-11	METAL CHIP	10K	5%	1/16W
R518	1-216-833-11	METAL CHIP	10K	5%	1/16W
R519	1-216-833-11	METAL CHIP	10K	5%	1/16W
R520	1-216-837-11	METAL CHIP	22K	5%	1/16W
R522	1-216-821-11	METAL CHIP	1K	5%	1/16W
R523	1-216-821-11	METAL CHIP	1K	5%	1/16W
R524	1-216-833-11	METAL CHIP	10K	5%	1/16W
R526	1-216-833-11	METAL CHIP	10K	5%	1/16W
R527	1-216-833-11	METAL CHIP	10K	5%	1/16W
R603	1-216-841-11	METAL CHIP	47K	5%	1/16W
R604	1-216-821-11	METAL CHIP	1K	5%	1/16W
R605	1-216-809-11	METAL CHIP	100	5%	1/16W
R606	1-216-821-11	METAL CHIP	1K	5%	1/16W
R607	1-216-809-11	METAL CHIP	100	5%	1/16W
R609	1-216-829-11	METAL CHIP	4.7K	5%	1/16W
R616	1-249-398-11	CARBON	27	5%	1/4W F (AEP,UK)
R616	1-249-401-11	CARBON	47	5%	1/4W F (US,CND,E51)
R617	1-216-829-11	METAL CHIP	4.7K	5%	1/16W
R618	1-216-821-11	METAL CHIP	1K	5%	1/16W
R619	1-216-809-11	METAL CHIP	100	5%	1/16W
R620	1-216-821-11	METAL CHIP	1K	5%	1/16W
R621	1-216-821-11	METAL CHIP	1K	5%	1/16W
R622	1-216-821-11	METAL CHIP	1K	5%	1/16W
R623	1-216-821-11	METAL CHIP	1K	5%	1/16W
R624	1-216-825-11	METAL CHIP	2.2K	5%	1/16W
R625	1-216-821-11	METAL CHIP	1K	5%	1/16W
R626	1-216-849-11	METAL CHIP	220K	5%	1/16W
R627	1-216-821-11	METAL CHIP	1K	5%	1/16W
R628	1-216-845-11	METAL CHIP	100K	5%	1/16W
R629	1-216-829-11	METAL CHIP	4.7K	5%	1/16W
R630	1-216-829-11	METAL CHIP	4.7K	5%	1/16W
R632	1-216-809-11	METAL CHIP	100	5%	1/16W
R633	1-216-821-11	METAL CHIP	1K	5%	1/16W
R634	1-216-821-11	METAL CHIP	1K	5%	1/16W
R635	1-216-821-11	METAL CHIP	1K	5%	1/16W
R636	1-216-821-11	METAL CHIP	1K	5%	1/16W
R637	1-216-821-11	METAL CHIP	1K	5%	1/16W
R638	1-216-821-11	METAL CHIP	1K	5%	1/16W
R639	1-216-809-11	METAL CHIP	100	5%	1/16W
R640	1-216-821-11	METAL CHIP	1K	5%	1/16W
R641	1-216-809-11	METAL CHIP	100	5%	1/16W
R642	1-216-821-11	METAL CHIP	1K	5%	1/16W
R643	1-216-821-11	METAL CHIP	1K	5%	1/16W
R644	1-216-821-11	METAL CHIP	1K	5%	1/16W
R645	1-216-821-11	METAL CHIP	1K	5%	1/16W
R646	1-216-821-11	METAL CHIP	1K	5%	1/16W
R647	1-216-821-11	METAL CHIP	1K	5%	1/16W
R648	1-216-821-11	METAL CHIP	1K	5%	1/16W

Ref. No.	Part No.	Description			Remarks
R649	1-216-821-11	METAL CHIP	1K	5%	1/16W
R650	1-216-821-11	METAL CHIP	1K	5%	1/16W
R651	1-216-821-11	METAL CHIP	1K	5%	1/16W
R653	1-216-821-11	METAL CHIP	1K	5%	1/16W
R655	1-216-821-11	METAL CHIP	1K	5%	1/16W
R656	1-216-821-11	METAL CHIP	1K	5%	1/16W
R657	1-216-821-11	METAL CHIP	1K	5%	1/16W
R658	1-216-821-11	METAL CHIP	1K	5%	1/16W
R659	1-216-821-11	METAL CHIP	1K	5%	1/16W
R660	1-216-821-11	METAL CHIP	1K	5%	1/16W
R661	1-216-821-11	METAL CHIP	1K	5%	1/16W
R663	1-216-821-11	METAL CHIP	1K	5%	1/16W
R665	1-216-821-11	METAL CHIP	1K	5%	1/16W
R666	1-216-821-11	METAL CHIP	1K	5%	1/16W
R667	1-216-821-11	METAL CHIP	1K	5%	1/16W
R668	1-216-821-11	METAL CHIP	1K	5%	1/16W
R669	1-216-821-11	METAL CHIP	1K	5%	1/16W
R670	1-216-821-11	METAL CHIP	1K	5%	1/16W
R671	1-216-821-11	METAL CHIP	1K	5%	1/16W
R672	1-216-821-11	METAL CHIP	1K	5%	1/16W
R673	1-216-821-11	METAL CHIP	1K	5%	1/16W
R674	1-216-821-11	METAL CHIP	1K	5%	1/16W
R675	1-216-821-11	METAL CHIP	1K	5%	1/16W
R676	1-216-821-11	METAL CHIP	1K	5%	1/16W
R677	1-216-821-11	METAL CHIP	1K	5%	1/16W
R678	1-216-821-11	METAL CHIP	1K	5%	1/16W
R679	1-216-821-11	METAL CHIP	1K	5%	1/16W
R680	1-216-821-11	METAL CHIP	1K	5%	1/16W
R681	1-216-821-11	METAL CHIP	1K	5%	1/16W
R682	1-216-821-11	METAL CHIP	1K	5%	1/16W
R683	1-216-821-11	METAL CHIP	1K	5%	1/16W
R684	1-216-821-11	METAL CHIP	1K	5%	1/16W
R685	1-216-821-11	METAL CHIP	1K	5%	1/16W
R686	1-216-821-11	METAL CHIP	1K	5%	1/16W
R687	1-216-821-11	METAL CHIP	1K	5%	1/16W
R688	1-216-821-11	METAL CHIP	1K	5%	1/16W
R689	1-216-821-11	METAL CHIP	1K	5%	1/16W
R690	1-216-821-11	METAL CHIP	1K	5%	1/16W
R691	1-216-821-11	METAL CHIP	1K	5%	1/16W
R692	1-216-821-11	METAL CHIP	1K	5%	1/16W
R693	1-216-821-11	METAL CHIP	1K	5%	1/16W
R694	1-216-821-11	METAL CHIP	1K	5%	1/16W
R695	1-216-829-11	METAL CHIP	4.7K	5%	1/16W
R698	1-216-821-11	METAL CHIP	1K	5%	1/16W
R699	1-216-825-11	METAL CHIP	2.2K	5%	1/16W (US,CND,E51)
R699	1-216-864-11	METAL CHIP	0	5%	1/16W (AEP,UK)
R854	1-216-818-11	METAL CHIP	560	5%	1/16W
R860	1-216-829-11	METAL CHIP	4.7K	5%	1/16W (AEP,UK)
R861	1-216-853-11	METAL CHIP	470K	5%	1/16W (AEP,UK)
R862	1-216-845-11	METAL CHIP	100K	5%	1/16W (AEP,UK)
R863	1-216-821-11	METAL CHIP	1K	5%	1/16W (AEP,UK)
R864	1-216-814-11	METAL CHIP	270	5%	1/16W (AEP,UK)
R865	1-216-841-11	METAL CHIP	47K	5%	1/16W (AEP,UK)
R866	1-216-809-11	METAL CHIP	100	5%	1/16W
R867	1-216-843-11	METAL CHIP	68K	5%	1/16W (AEP,UK)
R869	1-216-833-11	METAL CHIP	10K	5%	1/16W
R870	1-216-841-11	METAL CHIP	47K	5%	1/16W
R871	1-216-841-11	METAL CHIP	47K	5%	1/16W
R872	1-216-837-11	METAL CHIP	22K	5%	1/16W
R873	1-216-837-11	METAL CHIP	22K	5%	1/16W
R874	1-216-837-11	METAL CHIP	22K	5%	1/16W
R875	1-216-815-11	METAL CHIP	330	5%	1/16W
R876	1-216-841-11	METAL CHIP	47K	5%	1/16W
R877	1-216-829-11	METAL CHIP	4.7K	5%	1/16W
R878	1-216-829-11	METAL CHIP	4.7K	5%	1/16W
R879	1-249-408-11	CARBON	180	5%	1/4W F
R880	1-249-408-11	CARBON	180	5%	1/4W F
R881	1-216-841-11	METAL CHIP	47K	5%	1/16W
R882	1-216-829-11	METAL CHIP	4.7K	5%	1/16W
R890	1-216-841-11	METAL CHIP	47K	5%	1/16W
R891	1-216-829-11	METAL CHIP	4.7K	5%	1/16W
		< TERMINAL >			
SJ301	1-694-820-11	TERMINAL BOARD (L/R SPEAKER IMPEADANCE USE 6~16 Ω)			
		< VIBRATOR >			
X801	1-567-098-41	VIBRATOR, CRYSTAL 32.768kHz			
X802	1-781-107-21	VIBRATOR, SERAMIC 16MHz			
X803	1-579-242-41	VIBRATOR, CRYSTAL 4.332MHz (AEP,UK)			

****

	1-678-461-11	MOTOR BOARD			
		**********			
		< CAPACITOR >			
C721	1-162-306-11	CERAMIC	0.01uF	30.00%	16V

****

	1-681-015-12	POWER BOARD (AEP,UK,E51)			
	1-681-015-22	POWER BOARD (US,CND)			
		**********			
		< CAPACITOR >			
C907	1-101-005-00	CERAMIC	22000PF		50V
C908	1-101-005-00	CERAMIC	22000PF		50V
C909	1-101-005-00	CERAMIC	22000PF		50V
C910	1-101-005-00	CERAMIC	22000PF		50V
C911	1-161-494-00	CERAMIC	0.022uF		25V
C912	1-161-494-00	CERAMIC	0.022uF		25V
C913	1-161-494-00	CERAMIC	0.022uF		25V
C914	1-161-494-00	CERAMIC	0.022uF		25V
C925	1-164-227-11	CERAMIC CHIP	0.022uF	10%	25V (AEP,UK)
C927	1-126-767-11	ELECT	1000uF	20.00%	16V
C928	1-104-666-11	ELECT	220uF	20.00%	16V
C930	1-104-665-11	ELECT	100uF	20.00%	16V

POWER TC

Ref. No.	Part No.	Description				Remarks
		< CONNECTOR >				
CN901	1-564-321-00	PIN, CONNECTOR(3.96mm PITCH)2P				
CN902	1-766-282-11	PIN, CONNECTOR (PC BOARD) 9P				
		< DIODE >				
D901	8-719-991-33	DIODE 1SS133T-77				
D903	6-500-522-01	DIODE 10EDB40-TA1B2				
D904	6-500-522-01	DIODE 10EDB40-TA1B2				
D905	6-500-522-01	DIODE 10EDB40-TA1B2				
D906	6-500-522-01	DIODE 10EDB40-TA1B2				
D907	8-719-902-17	DIODE 1N5401				
D908	8-719-902-17	DIODE 1N5401				
D909	8-719-902-17	DIODE 1N5401				
D910	8-719-902-17	DIODE 1N5401				
D911	8-719-046-07	DIODE 2A02M				
D912	8-719-046-07	DIODE 2A02M				
D913	8-719-046-07	DIODE 2A02M				
D914	8-719-046-07	DIODE 2A02M				
D915	8-719-109-97	DIODE MTZJ-T-77-6.8C				
D920	6-500-522-01	DIODE 10EDB40-TA1B2				
		< FUSE HOLDER >				
FH901	1-533-313-11	FUSE HOLDER (E51)				
FH902	1-533-313-11	FUSE HOLDER (E51)				
FH903	1-533-313-11	FUSE HOLDER (E51)				
FH904	1-533-313-11	FUSE HOLDER (E51)				
FH905	1-533-313-11	FUSE HOLDER				
FH906	1-533-313-11	FUSE HOLDER				
FH907	1-533-313-11	FUSE HOLDER				
FH908	1-533-313-11	FUSE HOLDER				
FH909	1-533-313-11	FUSE HOLDER				
FH910	1-533-313-11	FUSE HOLDER				
		< GROUND TERMINAL >				
G901	1-537-770-21	TERMINAL BOARD, GROUND (US,CND)				
		< TRANSISTOR >				
Q901	8-729-028-54	TRANSISTOR	KTC3205-Y-AT			
Q902	8-729-119-79	TRANSISTOR	2SC2785TP-FEK			
Q903	8-729-028-54	TRANSISTOR	KTC3205-Y-AT			
		< RESISTOR >				
⚠R901	1-219-237-11	SOLID	3.3M	20%	1/2W (US,CND)	
R913	1-249-425-11	CARBON	4.7K	5%	1/4W	F
R914	1-249-437-11	CARBON	47K	5%	1/4W	
R916	1-249-417-11	CARBON	1K	5%	1/4W	F
		< RELAY >				
⚠RY901	1-755-332-11	RELAY				
		<SWITCH>				
⚠S901	1-786-152-11	SWITCH, SLIDE (VOLTAGE SELECTOR) (E51)				
		< TRANSFORMER >				
⚠T902	1-437-253-11	TRANSFORMER, POWER (SUB) (E51)				
⚠T902	1-437-730-11	TRANSFORMER, POWER (SUB) (AEP,UK)				
⚠T902	1-437-731-11	TRANSFORMER, POWER (SUB) (US,CND)				

****

Ref. No.	Part No.	Description				Remarks
	A-2007-972-A	TC BOARD, COMPLETE				
		**********				
		< CAPACITOR >				
C401	1-162-962-11	CERAMIC CHIP	470PF	10%	50V	
C402	1-162-962-11	CERAMIC CHIP	470PF	10%	50V	
C403	1-162-962-11	CERAMIC CHIP	470PF	10%	50V	
C404	1-162-962-11	CERAMIC CHIP	470PF	10%	50V	
C405	1-130-486-00	MYLAR	0.018uF	10%	50V	
C406	1-126-934-11	ELECT	220uF	20.00%	10V	
C407	1-126-947-11	ELECT	47uF	20.00%	16V	
C408	1-130-486-00	MYLAR	0.018uF	10%	50V	
C409	1-126-934-11	ELECT	220uF	20.00%	10V	
C410	1-126-961-11	ELECT	2.2uF	20.00%	50V	
C411	1-126-947-11	ELECT	47uF	20.00%	16V	
C412	1-104-665-11	ELECT	100uF	20.00%	16V	
C413	1-126-963-11	ELECT	4.7uF	20.00%	50V	
C414	1-126-947-11	ELECT	47uF	20.00%	16V	
C415	1-126-963-11	ELECT	4.7uF	20.00%	50V	
C416	1-126-947-11	ELECT	47uF	20.00%	16V	
C417	1-126-963-11	ELECT	4.7uF	20.00%	50V	
C418	1-126-963-11	ELECT	4.7uF	20.00%	50V	
C419	1-126-964-11	ELECT	10uF	20.00%	50V	
C420	1-126-964-11	ELECT	10uF	20.00%	50V	
C421	1-162-963-11	CERAMIC CHIP	680PF	10%	50V	
C422	1-162-963-11	CERAMIC CHIP	680PF	10%	50V	
C423	1-162-962-11	CERAMIC CHIP	470PF	10%	50V	
C424	1-162-962-11	CERAMIC CHIP	470PF	10%	50V	
C425	1-104-665-11	ELECT	100uF	20.00%	16V	
C426	1-162-970-11	CERAMIC CHIP	0.01uF	10%	25V	
C427	1-130-481-00	MYLAR	0.0068uF	5%	50V	
C428	1-126-947-11	ELECT	47uF	20.00%	16V	
C429	1-130-483-00	MYLAR	0.01uF	5%	50V	
C430	1-162-968-11	CERAMIC CHIP	0.0047uF	10%	50V	
C431	1-162-964-11	CERAMIC CHIP	0.001uF	10%	50V	
C432	1-162-964-11	CERAMIC CHIP	0.001uF	10%	50V	
C436	1-126-961-11	ELECT	2.2uF	20.00%	50V	
C438	1-128-551-11	ELECT	22uF	20.00%	25V	
		< CONNECTOR >				
CN401	1-569-928-11	SOCKET, CONNECTOR 11P				
		< IC >				
IC401	8-759-242-58	IC TA8189N				
IC402	8-759-508-69	IC BA3126N				
		< TRANSISTOR >				
Q401	8-729-028-54	TRANSISTOR	KTC3205-Y-AT			
Q402	8-729-037-02	TRANSISTOR	KTA1266Y-AT			
Q403	8-729-038-67	TRANSISTOR	KRC102S			
Q404	8-729-920-31	TRANSISTOR	DTC343TK-T-146			
Q405	8-729-920-31	TRANSISTOR	DTC343TK-T-146			
Q406	8-729-920-31	TRANSISTOR	DTC343TK-T-146			
Q410	8-729-038-67	TRANSISTOR	KRC102S			
Q413	8-729-920-31	TRANSISTOR	DTC343TK-T-146			

The components identified by mark ⚠ or dotted line with mark ⚠ are critical for safety. Replace only with part number specified.	Les composants identifiés par une marque ⚠ sont critiques pour la sécurité. Ne les remplacer que par une pièce portant le numéro spécifié.

TC | TRAY SENSOR

Ref. No.	Part No.	Description			Remarks
		< RESISTOR >			
R401	1-216-821-11	METAL CHIP	1K	5%	1/16W
R402	1-216-821-11	METAL CHIP	1K	5%	1/16W
R403	1-216-821-11	METAL CHIP	1K	5%	1/16W
R404	1-216-821-11	METAL CHIP	1K	5%	1/16W
R405	1-216-809-11	METAL CHIP	100	5%	1/16W
R406	1-216-848-11	METAL CHIP	180K	5%	1/16W
R407	1-218-867-11	METAL CHIP	6.8K	5%	1/10W
R409	1-216-833-11	METAL CHIP	10K	5%	1/16W
R410	1-216-833-11	METAL CHIP	10K	5%	1/16W
R411	1-216-848-11	METAL CHIP	180K	5%	1/16W
R412	1-216-824-11	METAL CHIP	1.8K	5%	1/16W
R413	1-216-851-11	METAL CHIP	330K	5%	1/16W
R415	1-216-857-11	METAL CHIP	1M	5%	1/16W
R416	1-216-825-11	METAL CHIP	2.2K	5%	1/16W
R417	1-216-833-11	METAL CHIP	10K	5%	1/16W
R418	1-216-815-11	METAL CHIP	330	5%	1/16W
R419	1-216-815-11	METAL CHIP	330	5%	1/16W
R422	1-218-867-11	METAL CHIP	6.8K	5%	1/10W
R423	1-216-848-11	METAL CHIP	180K	5%	1/16W
R424	1-216-809-11	METAL CHIP	100	5%	1/16W
R426	1-216-848-11	METAL CHIP	180K	5%	1/16W
R427	1-216-824-11	METAL CHIP	1.8K	5%	1/16W
R428	1-216-851-11	METAL CHIP	330K	5%	1/16W
R429	1-216-825-11	METAL CHIP	2.2K	5%	1/16W
R430	1-216-833-11	METAL CHIP	10K	5%	1/16W
R431	1-216-809-11	METAL CHIP	100	5%	1/16W
R432	1-216-836-11	METAL CHIP	18K	5%	1/16W
R433	1-216-836-11	METAL CHIP	18K	5%	1/16W
R434	1-216-841-11	METAL CHIP	47K	5%	1/16W
R435	1-216-829-11	METAL CHIP	4.7K	5%	1/16W
R436	1-216-797-11	METAL CHIP	10	5%	1/16W
R437	1-216-833-11	METAL CHIP	10K	5%	1/16W
R438	1-216-805-11	METAL CHIP	47	5%	1/16W
R439	1-216-805-11	METAL CHIP	47	5%	1/16W
R440	1-216-827-11	METAL CHIP	3.3K	5%	1/16W
R441	1-216-829-11	METAL CHIP	4.7K	5%	1/16W
R442	1-216-829-11	METAL CHIP	4.7K	5%	1/16W
R443	1-218-446-11	METAL CHIP	1	5%	1/10W
R444	1-216-837-11	METAL CHIP	22K	5%	1/16W
R445	1-216-805-11	METAL CHIP	47	5%	1/16W
R446	1-216-833-11	METAL CHIP	10K	5%	1/16W
R447	1-216-837-11	METAL CHIP	22K	5%	1/16W
R448	1-216-809-11	METAL CHIP	100	5%	1/16W
R449	1-216-809-11	METAL CHIP	100	5%	1/16W
R450	1-216-829-11	METAL CHIP	4.7K	5%	1/16W
R451	1-216-295-91	SHORT CHIP	0		
R455	1-216-841-11	METAL CHIP	47K	5%	1/16W
R456	1-216-841-11	METAL CHIP	47K	5%	1/16W
R457	1-216-833-11	METAL CHIP	10K	5%	1/16W
R458	1-216-825-11	METAL CHIP	2.2K	5%	1/16W
		< TRANSFORMER >			
T401	1-433-372-31	TRANSFORMER, BIAS OSCILLATION			
T402	1-419-080-11	COIL			
T403	1-419-080-11	COIL			

****

Ref. No.	Part No.	Description			Remarks
	1-678-457-11	TRAY SENSOR BOARD			
		**********			
		< CAPACITOR >			
C731	1-164-159-11	CERAMIC	0.1uF		50V
		< IC >			
IC731	8-749-016-76	IC RPI-321			
IC732	8-749-016-76	IC RPI-321			
IC733	8-749-016-76	IC RPI-321			
		< RESISTOR >			
R731	1-247-876-11	CARBON	75K	5%	1/4W
R732	1-249-408-11	CARBON	180	5%	1/4W F
R733	1-247-876-11	CARBON	75K	5%	1/4W
R734	1-249-408-11	CARBON	180	5%	1/4W F
R735	1-247-876-11	CARBON	75K	5%	1/4W
R736	1-249-408-11	CARBON	180	5%	1/4W F

****

Ref. No.	Part No.	Description
		MISCELLANEOUS
		**********
6	1-796-078-11	DECK, MECH
7	1-757-707-11	CABLE, FLEXIBLE FLAT (11 CORE)
10	1-757-705-11	CABLE, FLEXIBLE FLAT (11 CORE)
62	1-418-692-32	INDICATOR BLOCK, LED
63	1-418-693-32	INDICATOR BLOCK, LED
69	1-757-702-11	CABLE, FLEXIBLE FLAT (17 CORE)
70	1-757-703-11	CABLE, FLEXIBLE FLAT (21 CORE)
74	1-757-704-11	CABLE, FLEXIBLE FLAT (15 CORE)
75	1-757-706-11	CABLE, FLEXIBLE FLAT (17 CORE)
⚠104	1-696-169-51	CORD, POWER (AEP,UK)
⚠104	1-783-531-72	CORD, POWER (US,CND)
525	1-757-055-11	WIRE, PARALLEL (FFC) (16 CORE)
526	1-757-708-11	CABLE, FLEXIBLE FLAT (21 CORE)
532	1-471-035-11	MAGNET ASSY
⚠601	A-4735-357-A	BASE ASSY, OP (KSM-213D)
⚠F901	1-533-466-11	FUSE, GLASS TUBE (T1.25AL/250V) (E51)
⚠F902	1-533-464-11	FUSE, GLASS TUBE (T800mAL/250V) (E51)
⚠F903	1-533-468-11	FUSE, GLASS TUBE (DIA.5) (T2AL/250V) (AEP,UK,E51)
⚠F903	1-576-375-11	FUSE, GLASS TUBE (3.15A/125V) (US,CND)
⚠F904	1-533-468-11	FUSE, GLASS TUBE (DIA.5) (T2AL/250V) (AEP,UK,E51)
⚠F904	1-576-375-11	FUSE, GLASS TUBE (3.15A/125V) (US,CND,E51)
⚠F905	1-533-464-11	FUSE, GLASS TUBE (DIA.5) (T800mAL/250V) (AEP,UK)
⚠F905	1-576-374-11	FUSE, GLASS TUBE (1.25A/125V) (US,CND)
M102	X-2625-769-1	GEAR ASSY (MB) (RP), MOTOR (SLED)
M721	1-541-632-12	MOTOR, DC (ELEVATOR)
⚠T901	1-437-248-21	TRANSFORMER, POWER (MAIN) (AEP,UK)
⚠T901	1-437-249-11	TRANSFORMER, POWER (MAIN) (US,CND)
⚠T901	1-437-250-31	TRANSFORMER, POWER (E51)

The components identified by mark ⚠ or dotted line with mark ⚠ are critical for safety. Replace only with part number specified.	Les composants identifiés par une marque ⚠ sont critiques pour la sécurité. Ne les remplacer que par une pièce portant le numéro spécifié.

REVISION HISTORY

Clicking the version allows you to jump to the revised page.
Also, clicking the version at the upper right on the revised page allows you to jump to the next revised page.

Ver.	Date	Description of Revision
1.0	2003.02	New
1.1	2003.11	Deletion of 3-18. KSS-213D in DISASSEMBLY. Change of Part No. for Ref. No. 601 (KSM-213D) (SPM-03061)

REVISION HISTORY

Clicking the version allows you to jump to the revised page.
Also, clicking the version at the upper right on the revised page allows you to jump to the next revised page.

Ver.	Date	Description of Revision
1.0	2003.02	New

SS-CCP333

SERVICE MANUAL

Ver 1.0 2003. 02

US Model
Canadian Model
AEP Model
UK Model
E Model

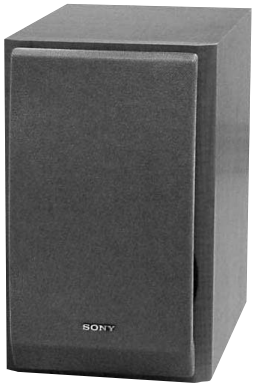

- SS-CCP333 is the speaker system in CMT-CP333.

SPECIFICATIONS

Speaker system	Two-way, bass reflex system
Speaker units	13 cm dia., cone type woofer 2.5 cm dia., semi-dome-type tweeter
Rated impedance	6 ohms
Dimensions (w/h/d) (CMT-CP333)	Approx. 170 × 275 × 280 mm
Mass	Approx. 3.0 kg net per speaker

Design and specifications are subject to change without notice.

SPEAKER SYSTEM

9-877-052-01
2003B1600-1
© 2003.02

Sony Corporation
Home Audio Company
Published by Sony Engineering Corporation

SONY®

EXPLODED VIEW AND PARTS LIST

NOTE:

- -XX, -X mean standardized parts, so they may have some differences from the original one.
- Items marked "*" are not stocked since they are seldom required for routine service. Some delay should be anticipated when ordering these items.
- The mechanical parts with no reference number in the exploded views are not supplied.

R-CH

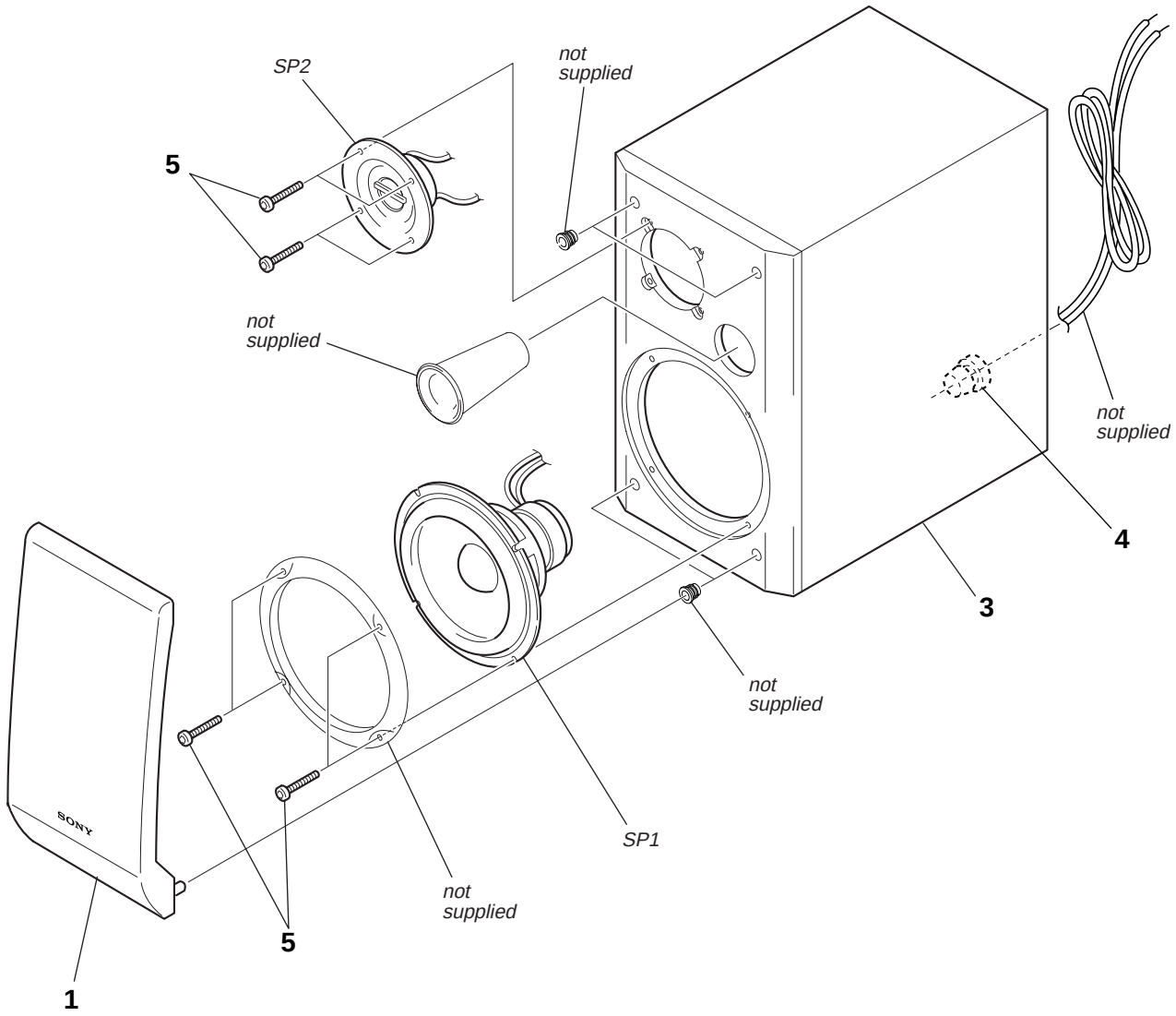

Ref. No.	Part No.	Description	Remarks
1	X-4955-463-1	NET ASSY, SPEAKER	
3	4-245-479-01	BOX (R), SPEAKER	
3	4-245-481-01	BOX (L), SPEAKER	
4	3-915-975-01	CLIPPER, CODE	
5	4-932-425-01	SCREW (3.5X20)	
SP1	1-825-504-11	SPEAKER (13cm)	
SP2	1-544-866-11	SPEAKER (2.5cm)	

MEMO

REVISION HISTORY

Clicking the version allows you to jump to the revised page.
Also, clicking the version at the upper right on the revised page allows you to jump to the next revised page.

Ver.	Date	Description of Revision
1.0	2003.02	New